On the Intersection of Tolerance and Cocomparability Graphs*

George B. Mertzios† Shmuel Zaks‡

Abstract

Tolerance graphs have been extensively studied since their introduction, due to their interesting structure and their numerous applications, as they generalize both interval and permutation graphs in a natural way. It has been conjectured by Golumbic, Monma, and Trotter in 1984 that the intersection of tolerance and cocomparability graphs coincides with bounded tolerance graphs. Since cocomparability graphs can be efficiently recognized, a positive answer to this conjecture in the general case would enable us to efficiently distinguish between tolerance and bounded tolerance graphs, although it is NP-complete to recognize each of these classes of graphs separately. This longstanding conjecture has been proved under some – rather strong – *structural* assumptions on the input graph; in particular, it has been proved for complements of trees, and later extended to complements of bipartite graphs, and these are the only known results so far. Furthermore, it is known that the intersection of tolerance and cocomparability graphs is contained in the class of trapezoid graphs. Our main result in this article is that the above conjecture is true for every graph G that admits a tolerance representation with exactly one unbounded vertex; note that this assumption concerns only the given tolerance *representation* R of G, rather than *any* structural property of G. Moreover, our results imply as a corollary that the conjecture of Golumbic, Monma, and Trotter is true for every graph $G = (V, E)$ that has no three independent vertices $a, b, c \in V$ such that $N(a) \subset N(b) \subset N(c)$, where $N(v)$ denotes the set of neighbors of a vertex $v \in V$; this is satisfied in particular when G is the complement of a triangle-free graph (which also implies the above-mentioned correctness for complements of bipartite graphs). Our proofs are constructive, in the sense that, given a tolerance representation R of a graph G, we transform R into a bounded tolerance representation R^* of G. Furthermore, we conjecture that any *minimal* tolerance graph G that is not a bounded tolerance graph, has a tolerance representation with exactly one unbounded vertex. Our results imply the non-trivial result that, in order to prove the conjecture of Golumbic, Monma, and Trotter, it suffices to prove our conjecture.

Keywords: Tolerance graphs, cocomparability graphs, 3-dimensional intersection model, trapezoid graphs, parallelogram graphs.

1 Introduction

A simple undirected graph $G = (V, E)$ on n vertices is called a *tolerance* graph if there exists a collection $I = \{I_u \mid u \in V\}$ of closed intervals on the real line and a set $t = \{t_u \mid u \in V\}$ of positive numbers, such that for any two vertices $u, v \in V$, $uv \in E$ if and only if $|I_u \cap I_v| \geq \min\{t_u, t_v\}$. The pair $\langle I, t\rangle$ is called a *tolerance representation* of G. A vertex u of G is called a *bounded vertex* (in a certain tolerance representation $\langle I, t\rangle$ of G) if $t_u \leq |I_u|$; otherwise, u is called an *unbounded vertex* of G. If G has a tolerance representation $\langle I, t\rangle$ where all vertices are bounded, then G is called a *bounded tolerance* graph and $\langle I, t\rangle$ a *bounded tolerance representation* of G.

Tolerance graphs find numerous applications in constrained-based temporal reasoning, data transmission through networks to efficiently scheduling aircraft and crews, as well as contributing to genetic analysis and studies of the brain [12, 13]. This class of graphs has been introduced in 1982 [10] in order to generalize some of the well known applications of interval graphs. The main motivation was in the context of resource allocation and scheduling problems, in which resources, such as rooms and

*Partially supported by the EPSRC Grant EP/K022660/1.

†School of Engineering and Computing Sciences, Durham University, United Kingdom. Email: `george.mertzios@durham.ac.uk`

‡Department of Computer Science, Technion, Haifa, Israel. Email: `zaks@cs.technion.ac.il`

vehicles, can tolerate sharing among users [13]. Since then, tolerance graphs have attracted many research efforts [2,4,8,11–14,16,18–20], as they generalize in a natural way both interval graphs (when all tolerances are equal) and permutation graphs [10](when $t_i = |I_i|$ for every $i = 1, 2, \ldots, n$); see [13] for a detailed survey.

Given an undirected graph $G = (V, E)$ and a vertex subset $M \subseteq V$, M is called a *module* in G, if for every $u, v \in M$ and every $x \in V \setminus M$, x is either adjacent in G to both u and v or to none of them. Note that $\emptyset$, V, and all singletons $\{v\}$, where $v \in V$, are trivial modules in G. A *comparability* graph is a graph which can be transitively oriented. A *cocomparability* graph is a graph whose complement is a comparability graph. A *trapezoid* (resp. *parallelogram* and *permutation*) graph is the intersection graph of trapezoids (resp. parallelograms and line segments) between two parallel lines L_1 and L_2 [9]. Such a representation with trapezoids (resp. parallelograms and line segments) is called a *trapezoid* (resp. *parallelogram* and *permutation*) *representation* of this graph. A graph is bounded tolerance if and only if it is a parallelogram graph [2]. The class of permutation graphs is a strict subset of the class of parallelogram graphs [3]. Furthermore, the class of parallelogram graphs is a strict subset of the class of trapezoid graphs [23], and both classes are subsets of the class of cocomparability graphs [9, 13]. On the other hand, not every tolerance graph is a cocomparability graph [9, 13].

Cocomparability graphs have received considerable attention in the literature, mainly due to their interesting structure that leads to efficient algorithms for several NP-hard problems, see e.g. [5, 6, 13, 17]. Furthermore, the intersection of the class of cocomparability graphs with other graph classes has interesting properties and coincides with other widely known graph classes. For instance, the intersection of the class of cocomparability graphs with the class of chordal graphs is the class of interval graphs [9], while its intersection with the class of comparability graphs is the class of permutation graphs [9, 22]. These structural characterizations produce direct algorithmic implications for the recognition problem of interval and permutation graphs, respectively, since the class of cocomparability graphs can be recognized efficiently [9, 24]. In this context, the following conjecture has been made in 1984 [11]:

Conjecture 1 ([11]) *The intersection of the class of cocomparability graphs with the class of tolerance graphs is exactly the class of bounded tolerance graphs.*

Note that the inclusion in one direction is immediate: every bounded tolerance graph is a cocomparability graph [9,13], as well as a tolerance graph by definition. Conjecture 1 is a longstanding open question (cf. the open problems section of [13]); it has been proved for complements of trees [1], and later extended to complements of bipartite graphs [21], and these are the only known results so far. Furthermore, it has been proved that the intersection of the classes of tolerance and cocomparability graphs is contained in the class of trapezoid graphs [8]. Since cocomparability graphs can be efficiently recognized [24], a positive answer to Conjecture 1 would enable us to efficiently distinguish between tolerance and bounded tolerance graphs, although it is NP-complete to recognize each of these classes of graphs separately [19]. Only little is known so far about the separation of tolerance and bounded tolerance graphs; a recent work can be found in [7]. An intersection model for general tolerance graphs has been recently presented in [18], given by 3-dimensional parallelepipeds. For a brief description of this intersection model we refer to Section 2 (see also Figures 1(a) and 1(b) for an illustration). This *parallelepiped representation* of tolerance graphs generalizes the parallelogram representation of bounded tolerance graphs; the main idea is to exploit the third dimension to capture the information given by unbounded tolerances. Furthermore, this model proved to be a powerful tool for designing efficient algorithms for general tolerance graphs [18].

Our contribution. Our main result is that Conjecture 1 is true for every graph G, for which there exists a tolerance representation with exactly one unbounded vertex. Furthermore, we state a new conjecture (cf. Conjecture 2 below) regarding the *minimal* separating examples between tolerance and bounded tolerance graphs. Unlike Conjecture 1, our conjecture does not concern any other class of graphs, such as cocomparability or trapezoid graphs. In order to state Conjecture 2, we first define a graph G to be a *minimally unbounded tolerance* graph, if G is tolerance but not bounded tolerance, while G becomes a bounded tolerance graph if we remove an arbitrary vertex of G.

Conjecture 2 *Any minimally unbounded tolerance graph has a tolerance representation with exactly one unbounded vertex.*

Our results imply the non-trivial result that, in order to prove Conjecture 1, it suffices to prove Conjecture 2. To the best of our knowledge, Conjecture 2 is true for all known examples of minimally unbounded tolerance graphs in the literature (see e.g. [13]).

All our results are based (a) on the 3-dimensional parallelepiped representation of tolerance graphs [18] and (b) on the fact that every graph G that is both a tolerance and a cocomparability graph, has a trapezoid representation R_T [8]. Specifically, in order to prove our results, we define three conditions on the unbounded vertices of G (in the parallelepiped representation R of G). Condition 1 states that R has exactly one unbounded vertex. Condition 2 states that, for every unbounded vertex u of G (in R), there exists no unbounded vertex v whose neighborhood is strictly included in the neighborhood of u. Note that both Conditions 1 and 2 concern only the parallelepiped representation R; furthermore, Condition 2 is weaker than Condition 1. Condition 3 (which has a more complicated statement, cf. Section 3.2) concerns the position of those trapezoids in the trapezoid representation R_T of G which correspond to unbounded vertices in the parallelepiped representation R. Furthermore, Condition 3 is weaker than both Conditions 1 and 2. That is, if a graph G satisfies Condition 1 then it also satisfies Condition 2; furthermore, if G satisfies Condition 2 then it also satisfies Condition 3. Note that our Conjecture 2 states that any minimal tolerance graph G that is not a bounded tolerance graph, has a tolerance representation R that satisfies Condition 1.

Consider a graph G that is both a tolerance and a cocomparability graph. Then G is also a trapezoid graph [8]. That is, G has both a parallelepiped representation R and a trapezoid representation R_T. Assuming that G satisfies Condition 3, we construct a parallelogram representation of G, thus proving that G is a bounded tolerance graph. Therefore, since Condition 3 is weaker than both Conditions 1 and 2, the same result immediately follows by assuming that the graph G satisfies Conditions 1 or Condition 2. In particular, this immediately implies our main result, i.e. that Conjecture 1 is true for every graph G that admits a tolerance representation with exactly one unbounded vertex (i.e. when Condition 1 is satisfied). However our results imply something stronger: even if Condition 1 is not satisfied for some minimal tolerance graph G that is not a bounded tolerance graph (i.e. even if our Conjecture 2 is not true), Conjecture 1 is true as long as any such minimal tolerance graph G satisfies Condition 2 or Condition 3. This is the reason why we prove our results assuming that G satisfies the (weakest) Condition 3.

Moreover, our results imply easily (cf. Corollary 2) that Conjecture 1 is true for every graph $G = (V, E)$ that has no three independent vertices $a, b, c \in V$ such that the neighborhood of a is strictly included in the neighborhood of b, which in turn is strictly included in the neighborhood of c. This is a consequence of the fact that, if a graph G has no such triple of vertices $\{a, b, c\}$, then Condition 2 is satisfied. Thus Conjecture 1 is true for all complements of triangle-free graphs (which also implies the above-mentioned correctness for complements of trees [1] and complements of bipartite graphs [21]).

The main idea of the proofs is to iteratively "eliminate" the unbounded vertices of the parallelepiped representation R. That is, assuming that the input representation R has $k \geq 1$ unbounded vertices, we choose an unbounded vertex u in R and construct a parallelepiped representation R^* of G with $k - 1$ unbounded vertices; specifically, R^* has the same unbounded vertices as R except for u (which becomes bounded in R^*). As a milestone in the above construction of the representation R^*, we construct an induced subgraph G_0 of G that includes u, with the property that the vertex set of $G_0 \setminus \{u\}$ is a module in $G \setminus \{u\}$. The presented techniques are new and provide geometrical insight for the graphs that are both tolerance and cocomparability.

Organization of the paper. We first review in Section 2 some properties of tolerance and trapezoid graphs. Then we define the notion of a *projection representation* of a tolerance graph G, which is an alternative way to think about a parallelepiped representation of G. Furthermore, we introduce the *right* and *left border properties* of a vertex in a projection representation, which are crucial for our analysis. In Section 3 we prove our main results. Specifically, we first consider in Section 3.1 the case where the graph G has at least one unbounded vertex u with the right or with the left border property

in its projection representation. Then we generalize in Section 3.2 the results of Section 3.1 to capture also the case that G has no such unbounded vertex. Next we discuss in Section 3.3 how these results reduce Conjecture 1 to Conjecture 2. Finally, we discuss the presented results and further research in Section 5.

2 Definitions and basic properties

Notation. We consider in this article simple undirected graphs with no loops or multiple edges. In a graph $G = (V, E)$, the edge between vertices u and v is denoted by uv, and in this case u and v are called *adjacent* in G. Given a vertex subset $S \subseteq V$, $G[S]$ denotes the induced subgraph of G on the vertices in S. Whenever it is clear from the context, we may not distinguish between a vertex set S and the induced subgraph $G[S]$ of G. In particular, if M is a module in G, we may also say that the induced subgraph $G[M]$ is a module in G. Furthermore, we denote for simplicity the induced subgraph $G[V \setminus S]$ by $G \setminus S$. Denote by $N(u) = \{v \in V \mid uv \in E\}$ the set of neighbors of a vertex u in G, and $N[u] = N(u) \cup \{u\}$. For a subset U of vertices of G, denote $N(U) = \bigcup_{u \in U} N(u) \setminus U$. For any k vertices $u_1, u_2, \ldots, u_k$ of G, denote for simplicity $N[u_1, u_2, \ldots, u_k] = N[u_1] \cup N[u_2] \cup \ldots \cup N[u_k]$, i.e. $N[u_1, u_2, \ldots, u_k] = N(\{u_1, u_2, \ldots, u_k\}) \cup \{u_1, u_2, \ldots, u_k\}$. For any two sets A and B, we will write $A \subseteq B$ if A is included in B, and $A \subset B$ if A is strictly included in B.

Consider a trapezoid graph $G = (V, E)$ and a trapezoid representation R_T of G, where for any vertex $u \in V$ the trapezoid corresponding to u in R_T is denoted by T_u. Since trapezoid graphs are also cocomparability graphs [9], we can define the partial order $(V, \ll_{R_T})$, such that $u \ll_{R_T} v$, or equivalently $T_u \ll_{R_T} T_v$, if and only if T_u lies completely to the left of T_v in R_T (and thus also $uv \notin E$). Note that there are several trapezoid representations of a particular trapezoid graph G. Given one such representation R_T, we can obtain another one R'_T by *vertical axis flipping* of R_T, i.e. R'_T is the mirror image of R_T along an imaginary line *perpendicular* to L_1 and L_2 (that is, the vertical axis flipping of R_T can be thought as some kind of "horizontal" flipping, where the relative positions of the lines L_1 and L_2 in the plane stays the same after the flipping).

Let us now briefly review the parallelepiped representation model of tolerance graphs [18]. Consider a tolerance graph $G = (V, E)$ that is given along with a tolerance representation R. Let V_B and V_U denote the set of bounded and unbounded vertices of G in this representation R, respectively. Consider now two parallel lines L_1 and L_2 in the plane. For every vertex $v \in V = V_B \cup V_U$, we appropriately construct a parallelogram $\overline{P}_v$ with two of its lines on L_1 and L_2, respectively (for details of this construction of the parallelograms we refer to [18]). For every $v \in V = V_B \cup V_U$ denote by ϕ_v the (common) angle of the other two lines of $\overline{P}_v$ with L_1 and L_2. According to this construction, for every unbounded vertex $v \in V_U$ the parallelogram $\overline{P}_v$ is trivial, i.e. a line [18]. It is important to note here that this set of parallelograms $\{\overline{P}_v : v \in V = V_B \cup V_U\}$ is *not* an intersection model for the graph G, as two parallelograms $\overline{P}_v, \overline{P}_w$ may have a non-empty intersection although $vw \notin E$. However the subset of parallelograms $\{\overline{P}_v : v \in V_B\}$ that corresponds to the *bounded* vertices (i.e. to the vertices of V_B) is an intersection model of the induced subgraph $G[V_B]$ on the bounded vertices. In order to construct an intersection model for the whole graph G (i.e. including also the set V_U of the unbounded vertices), we exploit the third dimension as follows. Once we have constructed the parallelograms $\{\overline{P}_v : v \in V = V_B \cup V_U\}$, we construct for every bounded vertex $v \in V_B$ the parallelepiped $P_v = \{(x, y, z) \mid (x, y) \in \overline{P}_v, 0 \leq z \leq \phi_v\}$ in the 3-dimensional space. Furthermore, for every unbounded vertex $v \in V_U$ we construct the line $P_v = \{(x, y, z) \mid (x, y) \in \overline{P}_v, z = \phi_v\}$. The resulting set $\{P_v \mid v \in V = V_B \cup V_U\}$ of objects in the 3-dimensional space is called the *parallelepiped representation* of the tolerance graph G [18]. This is an *intersection model* of G, i.e. two vertices v, w are adjacent if and only if $P_v \cap P_w \neq \emptyset$. For a proof of this fact and for more details about the parallelepiped representation of tolerance graphs we refer to [18].

An example of a tolerance graph G is given in Figure 1(a) (in this example, G is the induced path $P_4 = (z, u, v, w)$ with four vertices). Furthermore, a parallelepiped representation R is illustrated in Figure 1(b). In particular, vertex w is unbounded in the parallelepiped representation R, while the vertices z, u, v are bounded in R. In the following, let V_B and V_U denote the sets of bounded and

unbounded vertices of a tolerance graph G (for a certain parallelepiped representation), respectively.

Definition 1 ([18]) *An unbounded vertex $v \in V_U$ of a tolerance graph G is called* inevitable *(in a certain parallelepiped representation R), if making v a bounded vertex in R, i.e. if replacing P_v with $\{(x, y, z) \mid (x, y) \in P_v, 0 \leq z \leq \phi_v\}$, creates a new intersection in R (i.e. R is not any more an intersection model for G). A parallelepiped representation R of a tolerance graph G is called* canonical *if every unbounded vertex in R is inevitable.*

For example, the parallelepiped representation of Figure 1(b) is canonical, since w is the only unbounded vertex and it is inevitable. Given a parallelepiped representation R of a tolerance graph G there exists a unique canonical representation that can be obtained from R by iteratively replacing unbounded vertices with bounded vertices. However, as there may exist several parallelepiped representations R for a given tolerance graph G, there exist several canonical representations for G. Given a parallelepiped representation of G, the corresponding canonical representation can be computed in $O(n \log n)$ time, where n is the number of vertices of G [18].

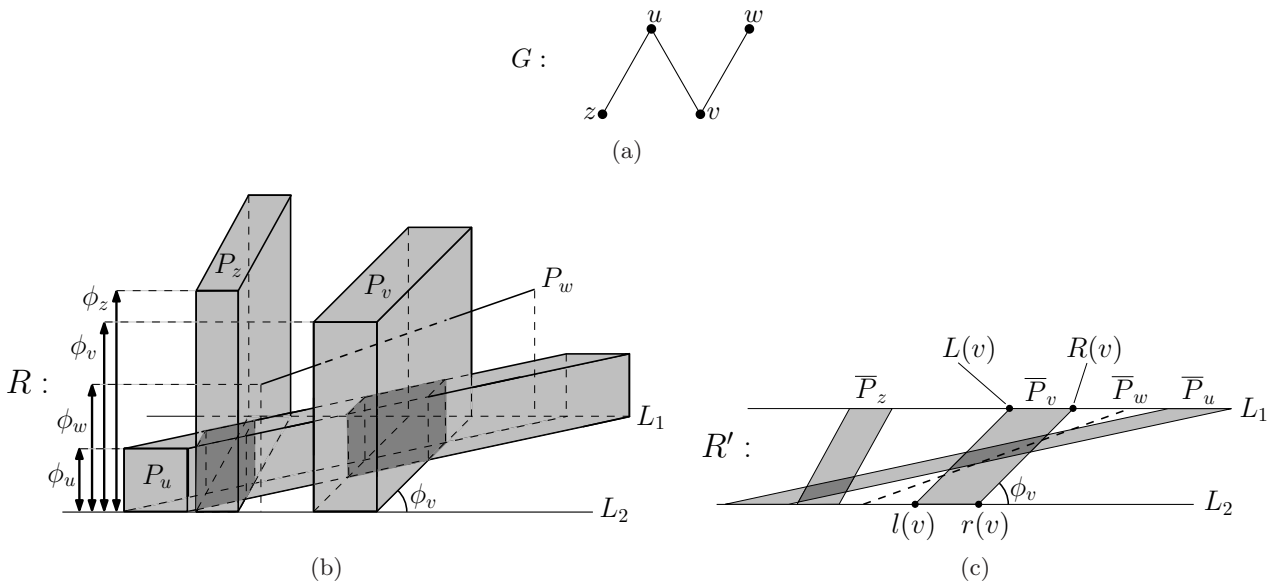

Figure 1: (a) A tolerance graph G (the induced path $P_4 = (z, u, v, w)$ with four vertices), (b) a parallelepiped representation R of G, and (c) the corresponding projection representation R' of G.

Given a parallelepiped representation R of the tolerance graph G, we define now an alternative representation, as follows. Let $\overline{P}_u$ be the projection of P_u to the plane $z = 0$ for every $u \in V$. Then, for two bounded vertices u and v, $uv \in E$ if and only if $\overline{P}_u \cap \overline{P}_v \neq \emptyset$.

Furthermore, for a bounded vertex v and an unbounded vertex u, $uv \in E$ if and only if $\overline{P}_u \cap \overline{P}_v \neq \emptyset$ and $\phi_v > \phi_u$. For an illustration of this fact we refer to Figure 1. In the projection representation of Figure 1(c), the unbounded vertex w is adjacent with the bounded vertex v but not with the bounded vertex u, since in the parallelepiped representation of Figure 1(b) the line P_w intersects with the parallelepiped P_v and not with the parallelepiped P_u; that is, the height ϕ_w of the line P_w is smaller than the height ϕ_v of the parallelepiped P_v and greater that the height ϕ_u of the parallelepiped P_u. Moreover, two unbounded vertices u and v of G are never adjacent (even if $\overline{P}_u$ intersects $\overline{P}_v$). In the following, we will call such a representation a *projection representation* of a tolerance graph. That is, a projection representation R' is a projection representation of G if there exists a parallelepiped representation R of G such that R' is a projection of every object of R to the plane $z = 0$. Note that $\overline{P}_u$ is a parallelogram (resp. a line segment) if u is bounded (resp. unbounded). The projection representation that corresponds to the parallelepiped representation of Figure 1(b) is presented in Figure 1(c).

In the following, we will say that a vertex u is *adjacent* to a vertex v in a projection representation R, if u is adjacent to v in the tolerance graph G_R induced by R. Furthermore, given a tolerance graph

G, we will call a projection representation R of G a *canonical representation* of G, if R is the projection representation that is implied by a canonical parallelepiped representation of G. In the example of Figure 1, the projection representation R' is canonical, since the parallelepiped representation R is canonical as well.

Let R be a projection representation of a tolerance graph $G = (V, E)$. For every parallelogram $\overline{P}_u$ in R, where $u \in V$, we define by $l(u)$ and $r(u)$ (resp. $L(u)$ and $R(u)$) the lower (resp. upper) left and right endpoint of $\overline{P}_u$, respectively (cf. the parallelogram $\overline{P}_v$ in Figure 1(c)). Note that $l(u) = r(u)$ and $L(u) = R(u)$ for every unbounded vertex u. Furthermore, we denote by ϕ_u the (common) angle of the lines of $\overline{P}_u$ in R that do not lie on L_1 or on L_2 (cf. the parallelepiped P_v in Figure 1(b) and the parallelogram $\overline{P}_v$ in Figure 1(c)). We assume throughout the paper w.l.o.g. that all endpoints and all angles of the parallelograms in a projection representation are distinct [13, 15, 18]. For simplicity of the presentation, we will denote in the following $\overline{P}_u$ just by P_u in any projection representation.

Throughout the paper, given a projection representation R, we will often need to transform R to another projection representation R' by moving endpoints of some parallelograms of R. After such a transformation, we say that the endpoint a on $L \in \{L_1, L_2\}$ lies in R' *immediately before* (resp. *immediately after*) the endpoint b on L, if there is no other endpoint between a and b in R' and $a = b - \varepsilon$ (resp. $a = b + \varepsilon$) on L, where $\varepsilon > 0$ is a sufficiently small positive number. Similarly, given a set A of points on $L \in \{L_1, L_2\}$, we say that A lies in R' *immediately before* (resp. *immediately after*) the endpoint b on L, if for every $a \in A$ there is no endpoint $c \notin A \cup \{b\}$ between a and b in R' and $a \in (b - \varepsilon, b)$ (resp. $a \in (b, b + \varepsilon)$) on L, where $\varepsilon > 0$ is a sufficiently small positive number. The exact value of $\varepsilon > 0$ will be chosen each time appropriately, such that certain conditions hold. As an illustration, in the projection representation of Figure 1(c) the upper endpoint of the line of the unbounded vertex w lies immediately before the upper left endpoint of the parallelogram of the bounded vertex u on L_1. Similarly, the lower endpoint of the line of the unbounded vertex w lies immediately after the lower right endpoint of the parallelogram of the bounded vertex z on L_2.

Similarly to a trapezoid representation, we can define the relation $\ll_R$ also for a projection representation R. Namely, $P_u \ll_R P_v$ if and only if P_u lies completely to the left of P_v in R. Otherwise, if neither $P_u \ll_R P_v$ nor $P_v \ll_R P_u$, we will say that P_u *intersects* P_v in R, i.e. $P_u \cap P_v \neq \emptyset$ in R. Furthermore, we define the total order $<_R$ on the lines L_1 and L_2 in R as follows. For two points a and b on L_1 (resp. on L_2), if a lies to the left of b on L_1 (resp. on L_2), then we will write $a <_R b$. Note that, for two vertices u and v of a tolerance graph $G = (V, E)$, P_u may intersect P_v in a projection representation R of G, although u is not adjacent to v in G, i.e. $uv \notin E$. Thus, a projection representation R of a tolerance graph G is *not* necessarily an intersection model for G.

Let R be a projection representation of a tolerance graph $G = (V, E)$ and $S \subseteq V$ be a set of vertices of G. We denote by $R \setminus S$ the representation that we obtain by removing the parallelograms $\{P_u \mid u \in S\}$ from R. Then, $R \setminus S$ is a projection representation of the induced subgraph $G \setminus S = G[V \setminus S]$ of G. Furthermore, similarly to the trapezoid representations, there are several projection representations of a particular tolerance graph G. In the next two definitions, we associate with every projection representation of a tolerance graph G another projection representation of the same graph G with special properties.

Definition 2 *Let R be a projection representation. The* reverse *representation $\widehat{R}$ of R is obtained as the rotation of R by the angle π.*

As an example, given the projection representation R' presented in Figure 1(c), its reverse representation $\widehat{R'}$ is illustrated in Figure 2(a). It is easy to see that if R is a projection representation of a tolerance graph G, then for any two vertices u and v of G, $P_u \ll_R P_v$ if and only if $P_v \ll_{\widehat{R}} P_u$, and that $P_u \cap P_v \neq \emptyset$ in $\widehat{R}$ if and only if $P_u \cap P_v \neq \emptyset$ in R. Furthermore, the angle ϕ_u in $\widehat{R}$ equals the angle ϕ_u in R, for every vertex u of G. Therefore, reverse representation $\widehat{R}$ of R is also a projection representation of the same graph G.

Definition 3 *Let L_1 and L_2 be two parallel lines and ℓ be a line segment with endpoints a_ℓ and b_ℓ on L_1 and on L_2, respectively, and $\varepsilon > 0$ be arbitrary. A projection representation R_ℓ between L_1*

*and L_2 is ε-*squeezed *with respect to ℓ, if all endpoints of R_ℓ on L_1 and on L_2 lie in the intervals $[a_\ell - \frac{\varepsilon}{2}, a_\ell + \frac{\varepsilon}{2}]$ and $[b_\ell - \frac{\varepsilon}{2}, b_\ell + \frac{\varepsilon}{2}]$, respectively.*

As an example, given the projection representation R' presented in Figure 1(c), the ε-squeezed representation R'_ℓ of R' with respect to a line ℓ is illustrated in Figure 2(b). It can be easily seen that, given a projection representation R of a tolerance graph G, a line segment ℓ with endpoints on L_1 and on L_2, and any $\varepsilon > 0$, there exists an ε-squeezed projection representation R_ℓ of G with respect to ℓ; however, we will apply this squeezing operation in a rather delicate way (cf. the proof of Theorem 2) to only some of the parallelograms in a given representation, in order to get some desired properties.

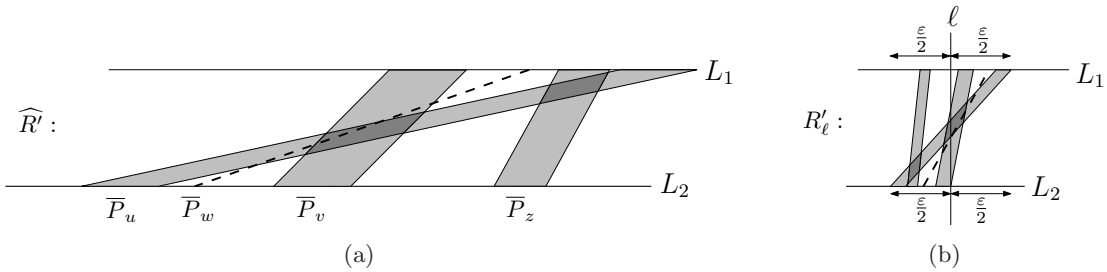

Figure 2: (a) The reverse representation $\widehat{R'}$ of the projection representation R' of Figure 1(c), and (b) the ε-squeezed representation R'_ℓ of R' with respect to the line ℓ.

Lemma 1 *Let G be a tolerance graph and u be an unbounded vertex of G in a projection representation R of G. Then, for every $v \in N(u)$, we have $r(u) <_R r(v)$, $L(v) <_R L(u)$, and v is a bounded vertex in R.*

Proof. Let $v \in N(u)$. Then, since u is unbounded, and since no two unbounded vertices are adjacent, v is a bounded vertex in R and $\phi_v > \phi_u$. Moreover P_u intersects P_v in the projection representation R (since in the parallelepiped representation of G the line of vertex u must intersect with the parallelepiped of vertex v). Suppose that $r(u) = l(u) >_R r(v)$ (resp. $L(v) >_R L(u) = R(u)$). Then, since P_u intersects P_v in R, it follows that $L(u) = R(u) <_R R(v)$ (resp. $l(v) <_R r(u) = l(u)$), and thus $\phi_v < \phi_u$, which is a contradiction. Therefore, $r(u) <_R r(v)$ and $L(v) <_R L(u)$. ■

Lemma 2 *Let G be a tolerance graph and u be an unbounded vertex of G in a projection representation R of G. Then for every vertex $v \neq u$, such that P_v intersects P_u in R and $\phi_v < \phi_u$, we have that $l(v) <_R l(u)$ and $R(u) <_R R(v)$.*

Proof. Suppose first that $l(u) <_R l(v)$. Then, since by assumption P_v intersects P_u in R, it follows that $L(v) <_R L(u)$, and thus $\phi_v > \phi_u$ in R, which is a contradiction. Thus, $l(v) <_R l(u)$. Similarly, if $R(v) <_R R(u)$, then $r(u) <_R r(v)$, since P_v intersects P_u in R, and thus $\phi_v > \phi_u$ in R, which is again a contradiction. Thus, $R(u) <_R R(v)$. ■

In Figure 2(a) an example for Lemma 1 (resp. Lemma 2) is illustrated, where w is the unbounded vertex and $v \in N(w)$ (resp. u is a vertex, such that P_u intersects P_w in R and $\phi_u < \phi_w$).

Lemma 3 *Let $G = (V, E)$ be a tolerance graph, R be a projection representation of G, and u, v be two vertices of G. If $uv \notin E$, P_u intersects P_v in R, and $\phi_v < \phi_u$ in R, then $N(u) \subseteq N(v)$.*

Proof. Suppose first that u is a bounded vertex in R. Then, in both cases where v is bounded or unbounded, u is adjacent to v in R, since $P_v \cap P_u \neq \emptyset$ and $\phi_v < \phi_u$. This is a contradiction, since $vu \notin E$. Thus u is an unbounded vertex in R. Furthermore, since P_v intersects P_u in R and $\phi_v < \phi_u$ by assumption, Lemma 2 implies that $l(v) <_R l(u)$ and $R(u) <_R R(v)$.

Consider now a vertex $w \in N(u)$. Then, w is a bounded vertex in R, $r(u) <_R r(w)$, and $L(w) <_R L(u)$ by Lemma 1. Therefore, since $l(v) <_R l(u) = r(u)$ and $L(u) = R(u) <_R R(v)$, it follows that $l(v) <_R r(w)$ and $L(w) <_R R(v)$. Thus P_w intersects P_v in R. Furthermore $\phi_u < \phi_w$,

since $w \in N(u)$ and u is unbounded. That is, $\phi_v < \phi_u < \phi_w$. Therefore, since also P_w intersects P_v in R and w is bounded, it follows that $w \in N(v)$. Thus $N(u) \subseteq N(v)$. ■

In [12,18] the *hovering set* of an unbounded vertex in a tolerance graph has been defined. According to these definitions, the hovering set depends on a particular representation of the tolerance graph. In the following, we extend this definition to the notion of *covering* vertices of an arbitrary graph G, which is independent of any representation of G.

Definition 4 *Let $G = (V, E)$ be an arbitrary graph and $u \in V$ be a vertex of G. A vertex $v \neq u$ is a* covering *vertex of u if $N(u) \subseteq N(v)$. The set of connected components of $G \setminus N[u]$ that have at least one covering vertex v of u in G is denoted by $V_0(u)$.*

Note that if $N(u) \subseteq N(v)$ then the vertices u and v are not adjacent. Therefore, for every covering vertex v of a vertex u, we have that $v \in V \setminus N[u]$ (cf. Definition 4). Now, similarly to [12], we state the following auxiliary lemma.

Lemma 4 *Let $G = (V, E)$ be a tolerance graph and R be a canonical representation of G. Then, for every unbounded vertex u of G in R, there exists a covering vertex u^* of u in G, such that u^* is bounded in R, P_{u^*} intersects P_u in R, and $\phi_{u^*} < \phi_u$. Thus, in particular $V_0(u) \neq \emptyset$.*

Proof. Let u be an arbitrary unbounded vertex of G in R. Since R is a canonical representation of G, u is inevitable by Definition 1, i.e. if we make u a bounded vertex in R then we introduce at last one new adjacency uu^* in G. That is, there exists at least one vertex u^*, such that P_{u^*} intersects P_u in R, $\phi_{u^*} < \phi_u$, and $uu^* \notin E$. Then, Lemma 3 implies that $N(u) \subseteq N(u^*)$, i.e. u^* is a covering vertex of u.

Suppose now that every covering vertex v of u, such that P_v intersects P_u in R and $\phi_v < \phi_u$, is unbounded, and let u^* be the vertex with the smallest angle ϕ_{u^*} among them in R. Since u^* is assumed to be unbounded, there exists similarly to the previous paragraph at least one vertex u^{**}, such that $P_{u^{**}}$ intersects P_{u^*} in R and $\phi_{u^{**}} < \phi_{u^*}$. Thus $N(u^*) \subseteq N(u^{**})$ by Lemma 3. Therefore, since also $N(u) \subseteq N(u^*)$, it follows that $N(u) \subseteq N(u^{**})$. Applying Lemma 2 on the vertices u, u^*, as well as on the vertices u^*, u^{**}, we obtain that $l(u^{**}) <_R l(u^*) <_R l(u)$ and $R(u) <_R R(u^*) <_R R(u^{**})$. Thus, in particular, $P_{u^{**}}$ intersects P_u in R.

Thus u^{**} is a covering vertex of u such that $P_{u^{**}}$ intersects P_u in R and $\phi_{u^{**}} < \phi_{u^*} < \phi_u$. This contradicts our assumption that u^* has the smallest angle among those covering vertices v of u such that P_v intersects P_u in R and $\phi_v < \phi_u$. Therefore, for every unbounded vertex u there exists at least one covering vertex u^* of u, such that P_{u^*} intersects P_u in R, $\phi_{u^*} < \phi_u$, and u^* is bounded in R. Furthermore, note that $u^* \in V_0(u)$, and thus $V_0(u) \neq \emptyset$. ■

For simplicity of the presentation we may not distinguish in the following between a connected component of $V_0(u)$ (cf. Definition 4) and the vertex set of this component of $V_0(u)$. Note here that $V_0(u) \neq \emptyset$ for every unbounded vertex u in a canonical representation R, as we proved in Lemma 4. In the next definition we introduce the notion of the right (resp. left) border property of a vertex u in a projection representation R of a tolerance graph G. This notion is of particular importance for the remainder of the paper.

Definition 5 *Let $G = (V, E)$ be a tolerance graph, u be an arbitrary vertex of G, and R be a projection representation of G. Then, u has the* right *(resp.* left*)* border property *in R, if there exists* no pair *of vertices $w \in N(u)$ and $v \in V_0(u)$, such that $P_w \ll_R P_v$ (resp. $P_v \ll_R P_w$).*

Observation 1 *If a vertex u has the left border property in a projection representation R of a tolerance graph G, then u has the right border property in the reverse representation $\widehat{R}$ of R.*

An illustration of Definition 5 is given in Figure 3 which depicts a projection representation R of a tolerance graph G with 10 vertices. In this figure the transparent parallelograms P_{w_1}, P_{w_2} correspond to the neighbors $N(u) = \{w_1, w_2\}$ of the unbounded vertex u in G. The light colored parallelograms

$P_{v_1}, P_{v_2}, P_{v_3}, P_{v_4}$ correspond to the vertices of $V_0(u) = \{v_1, v_2, v_3, v_4\}$. Note that the vertices v_1 and v_2 are the covering vertices of u in G (since $N(u) \subseteq N(v_1)$ and $N(u) \subseteq N(v_2)$. The dark colored parallelograms $P_{x_1}, P_{x_2}, P_{x_3}$ correspond to the vertices of $(V \setminus N[u]) \setminus V_0(u) = \{x_1, x_2, x_3\}$. The unbounded vertex u does *not* have the right border property in R, since there exist the vertices $w_1 \in N(u)$ and $v_3 \in V_0(u)$ such that $P_{w_1} \ll_R P_{v_3}$. However u has the left border property in R, since there does *not* exist any pair of vertices $w \in N(u)$ and $v \in V_0(u)$ such that $P_w \ll_R P_v$.

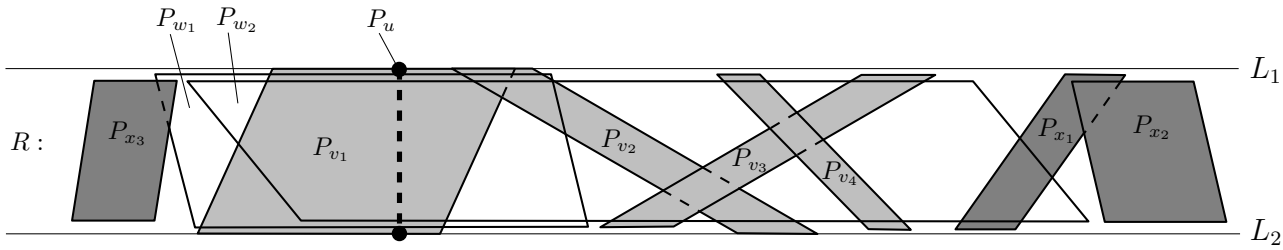

Figure 3: The projection representation R of a tolerance graph G with 10 vertices. The unbounded vertex u does not have the right border property in R, but u has the left border property in R.

We denote in the following by Tolerance the class of tolerance graphs, and we use the corresponding notations for the classes of bounded tolerance, cocomparability, and trapezoid graphs. Let $G \in$ Tolerance $\cap$ Cocomparability. Then G is also a trapezoid graph [8]. Thus, since Trapezoid $\subseteq$ Cocomparability, we obtain the following lemma.

Lemma 5 Tolerance $\cap$ Cocomparability = Tolerance $\cap$ Trapezoid.

Furthermore, clearly Bounded Tolerance $\subseteq$ (Tolerance $\cap$ Trapezoid), since Bounded Tolerance $\subseteq$ Tolerance and Bounded Tolerance $\subseteq$ Trapezoid. In what follows, we consider a graph $G \in$ (Tolerance $\cap$ Trapezoid) $\setminus$ Bounded Tolerance, assuming that one exists, and our aim is to get to a contradiction; namely, to prove that (Tolerance $\cap$ Trapezoid) = Bounded Tolerance.

Now we state two lemmas that are of crucial importance for the proof of Theorems 1 and 2, (in Sections 3.1 and 3.2, respectively).

Lemma 6 *Let $G \in$ (Tolerance $\cap$ Trapezoid) $\setminus$ Bounded Tolerance with the smallest number of vertices and u be a vertex of G. Then, either $V_0(u) = \emptyset$ or $V_0(u)$ is connected.*

Proof. For the sake of contradiction, suppose that $V_0(u)$ has at least two connected components, for some vertex u of G. Let v_1 and v_2 be two covering vertices of u that belong to two different connected components of $V_0(u)$. Since G has the smallest number of vertices in the class (Tolerance $\cap$ Trapezoid) $\setminus$ Bounded Tolerance, $G \setminus \{u\}$ is a bounded tolerance graph. Let R be any parallelogram representation of $G \setminus \{u\}$, and R' be the representation of $G \setminus N[u]$ obtained by R if we remove all parallelograms that correspond to vertices of $N(u)$. Note that two parallelograms corresponding to vertices of different connected components of $G \setminus N[u]$ never intersect in R'. Thus, since v_1 and v_2 belong to different connected components of $G \setminus N[u]$, we can draw a line segment ℓ between the connected components of v_1 and v_2 in $G \setminus N[u]$, which does not intersect any parallelogram of R'. Since $N(u) \subseteq N(v_1)$ and $N(u) \subseteq N(v_2)$, for every $w \in N(u)$ the parallelogram P_w in R intersects both P_{v_1} and P_{v_2}. Therefore, since the line segment ℓ lies between P_{v_1} and P_{v_2}, it follows that P_w must intersect ℓ in the representation R. Thus, we can add the trivial parallelogram $P_u = \ell$ to R to obtain a parallelogram representation of G. Thus, G is a parallelogram graph, i.e. a bounded tolerance graph, which contradicts our choice of G. Therefore, either $V_0(u) = \emptyset$ or $V_0(u)$ is connected, for any vertex u of G. ■

The next lemma follows now easily by Lemmas 4 and 6.

Lemma 7 *Let $G \in$ (Tolerance $\cap$ Trapezoid) $\setminus$ Bounded Tolerance with the smallest number of vertices and v_1, v_2 be distinct unbounded vertices of G in a canonical projection representation R of G. Then $N(v_1) \neq N(v_2)$.*

Proof. Suppose otherwise that $N(v_1) = N(v_2)$ for two unbounded vertices v_1 and v_2 in R, i.e. v_2 is a covering vertex of v_1 and v_1 is a covering vertex of v_2. Furthermore, v_1 is an isolated vertex in $G \setminus N[v_2]$. Recall now by Lemma 4 that there exists at least one covering vertex v_2^* of v_2 in R, such that v_2^* is bounded in R. Then, since v_1 is unbounded and v_2^* is bounded in R, it follows that the covering vertices v_1 and v_2^* of v_2 do not lie in the same connected component of $G \setminus N[v_2]$. That is, $V_0(v_2)$ is not connected, which is a contradiction by Lemma 6. Thus, $N(v_1) \neq N(v_2)$. ■

3 Main results

In this section we present our main results. Consider a graph G that is both a tolerance and a trapezoid graph, where R is a projection representation of G. Then, we choose a certain unbounded vertex u in R and we "eliminate" u in R in the following sense: assuming that R has $k \geq 1$ unbounded vertices, we construct a projection representation R^* of G with $k-1$ unbounded vertices, where all bounded vertices remain bounded and u is transformed to a bounded vertex. In Section 3.1 we deal with the case where the unbounded vertex u has the right or the left border property in R, while in Section 3.2 we generalize the results of Section 3.1 to capture also the case where u has neither the left nor the right border property in R. Finally we combine these two results in Section 3.3, in order to eliminate all k unbounded vertices in R, regardless of whether or not they have the right or left border property.

3.1 The case where u has the right or the left border property

In this section we consider an arbitrary unbounded vertex u of G in the projection representation R, and we assume that u has the right or the left border property in R. Then, as we prove in the next theorem, there is another projection representation R^* of G, in which u is a bounded vertex.

Theorem 1 *Let $G = (V, E) \in$ (Tolerance $\cap$ Trapezoid) $\setminus$ Bounded Tolerance with the smallest number of vertices. Let R be a projection representation of G with k unbounded vertices and u be an unbounded vertex in R. If u has the right or the left border property in R, then there exists a projection representation R^* of G with $k-1$ unbounded vertices.*

Proof. It suffices to prove the theorem only for the case where u has the *right border property* in R, since the case where u has the left border property is symmetric. Indeed, if u has the left border property in R, then u has by Observation 1 the right border property in the reverse representation $\widehat{R}$ of G.

If R is not a canonical representation of G, then there exists a projection representation R^* of G with $k-1$ unbounded vertices by Definition 1. Suppose for the remainder of the proof that R is a canonical representation of G. Then, for the unbounded vertex u of G in R, there exists at least one bounded covering vertex u^* of u by Lemma 4. Therefore $V_0(u) \neq \emptyset$, and thus $V_0(u)$ is connected by Lemma 6. The proof is done constructively. Namely, we will construct the projection representations R', R'', and R''', by applying to R sequentially the Transformations 1, 2, and 3, respectively. Finally, R''' is a projection representation of the same graph G with $k-1$ unbounded vertices, where u is represented as a bounded vertex in R'''.

For simplicity, we add an isolated bounded vertex t to G. That is, in the remainder of the proof we consider $V \cup \{t\}$ to be the vertex set of G. This vertex t corresponds to a parallelogram P_t, such that $P_v \ll_R P_t$ for every vertex $v \in V$. Recall that V_B and V_U denote the sets of bounded and unbounded vertices of G in R, respectively (note that $t \in V_B$). First, we define for every $w \in N(u)$ the value:

- $L_0(w) = \min_R\{L(x) \mid x \in V_B \setminus N(u), P_w \ll_R P_x\}$

Note that the value $L_0(w)$ is well defined for every $w \in N(u)$, since in particular $t \in V_B \setminus N(u)$ and $P_w \ll_R P_t$. Moreover, for every $w \in N(u)$, w is a bounded vertex and $\phi_w > \phi_u$. For every vertex $x \in V_B \setminus N(u)$, such that $P_w \ll_R P_x$ for some $w \in N(u)$, it follows that $x \notin V_0(u)$ by Definition 5, since u has the right border property in R by assumption. Thus, for every $w \in N(u)$, it follows that:

- $L_0(w) = \min_R\{L(x) \mid x \in (V_B \setminus N(u)) \setminus V_0(u), P_w \ll_R P_x\}$

Define now the value ℓ_0 and the subset $N_1 \subseteq N(u)$ as follows:

- $\ell_0 = \max_R\{l(x) \mid x \in V_0(u)\}$
- $N_1 = \{w \in N(u) \mid r(w) <_R \ell_0\}$

An example of a projection representation R of a tolerance graph G with seven vertices is illustrated in Figure 4(a). In this figure, the parallelogram P_u of the unbounded vertex u is illustrated by a bold and dotted line. The transparent parallelograms P_{w_1} and P_{w_2} correspond to the neighbors $N(u) = \{w_1, w_2\}$ of u in G, the light colored parallelograms P_{u^*} and P_x correspond to the vertices of $V_0(u) = \{u^*, x\}$, and the dark colored parallelograms P_y and P_t correspond to the vertices of $(V \setminus N[u]) \setminus V_0(u) = \{y, t\}$. In this example, $L_0(w_1) = L(t)$, $L_0(w_2) = L(y)$, and $\ell_0 = l(x)$, while $N_1 = \{w_1, w_2\}$.

We construct now the projection representation R' from R as follows.

Transformation 1 *For every $w \in N_1$, move the right line of P_w parallel to the right, until either $r(w)$ comes immediately after ℓ_0 on L_2, or $R(w)$ comes immediately before $L_0(w)$ on L_1. Denote the resulting projection representation by R'.*

Note that the left lines of all parallelograms do not move during Transformation 1. Thus, in particular, the value of ℓ_0 is the same in R and in R', i.e.:

- $\ell_0 = \max_{R'}\{l(x) \mid x \in V_0(u)\}$

Lemma 8 *R' is a projection representation of G.*

Proof. Denote by x_0 the vertex of $V_0(u)$, such that $\ell_0 = l(x_0)$. Recall by Lemma 4 that there exists a covering vertex u^* of u in G, such that u^* is bounded in R. Since we move the right line of some parallelograms to the right, i.e. we increase some parallelograms, all adjacencies of R are kept in R'. Suppose that R' has the new adjacency wv that is not an adjacency in R, for some $w \in N_1$. Therefore P_w intersects P_v in R', and since only the right sides of the parallelograms of N_1 are moved, it follows that $P_w \ll_R P_v$. Thus $v \notin V_0(u)$, since u has the right border property in R by assumption. Furthermore $r(w) <_R \ell_0 = l(x_0)$, since $w \in N_1$. However, since $x_0 \in V_0(u)$, and since u has the right border property in R, it follows that P_w intersects P_{x_0} in R, and thus $L(x_0) <_R R(w)$.

Moreover, $r(u) <_R r(w) <_R l(x_0)$ and $L(w) <_R L(u)$ by Lemma 1. Suppose that $L(x_0) <_R L(u) = R(u)$. Then, P_u intersects P_{x_0} in R and $\phi_{x_0} > \phi_u$. Thus, x_0 is unbounded, since otherwise $x_0 \in N(u)$, which is a contradiction. Furthermore, $N(x_0) \subseteq N(u)$ by Lemma 3, and thus x_0 is an isolated vertex of $G \setminus N[u]$. Therefore, since x_0 is unbounded and u^* is bounded in R, it follows that x_0 and u^* do not lie in the same connected component of $G \setminus N[u]$. That is, $V_0(u)$ is not connected, which is a contradiction. Thus, $L(u) = R(u) <_R L(x_0)$, i.e. $R(u) <_R L(x_0) <_R R(w) <_R L(v)$ and $r(u) <_R r(w) <_R l(v)$, which implies that $P_u \ll_R P_v$, and thus $v \notin N(u)$.

Consider now the projection representation R' constructed by Transformation 1. Let first $r(w) <_{R'} l(v)$. Then, since P_w intersects P_v in R', it follows that $L(v) <_{R'} R(w)$, and thus $\phi_v > \phi_w$. If v is an unbounded vertex, then w is not adjacent to v in R', which is a contradiction to the assumption. Thus, v is a bounded vertex. Recall that $P_w \ll_R P_v$ and that $v \notin V_0(u)$ and $v \notin N(u)$, i.e. $v \in (V_B \setminus N(u)) \setminus V_0(u)$, and thus $L_0(w) \leq_R L(v)$ in R by definition of $L_0(w)$. Furthermore, since the left lines of the parallelograms in R do not move during Transformation 1, it remains also $L_0(w) \leq_{R'} L(v)$ in R'. Therefore, since $R(w) <_{R'} L_0(w)$ by definition of Transformation 1, it follows that $R(w) <_{R'} L(v)$, which is a contradiction, since $L(v) <_{R'} R(w)$, as we proved above in this paragraph.

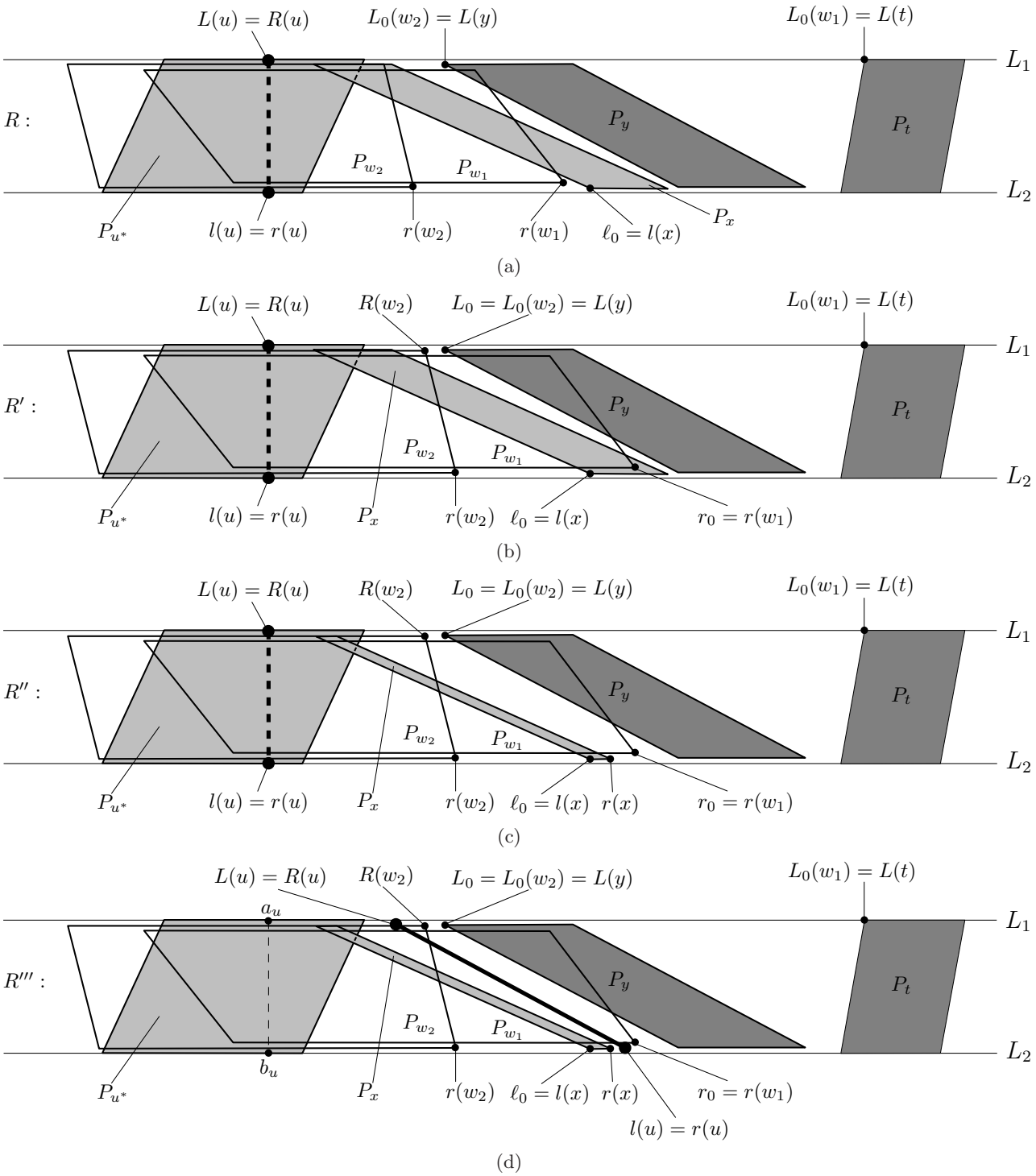

Figure 4: (a) The projection representation R of a tolerance graph G with seven vertices, and the projection representations (b) R' after Transformation 1, (c) R'' after Transformation 2, and (d) R''' after Transformation 3.

Let now $l(v) <_{R'} r(w)$. Suppose that $l(x_0) <_{R'} l(v)$. Then, since $r(w)$ comes in R' at most immediately after $\ell_0 = l(x_0)$ on L_2, it follows that also $r(w) <_{R'} l(v)$, which is a contradiction. Therefore, $l(v) <_{R'} l(x_0)$, and thus since the left lines of the parallelograms in R do not move during Transformation 1, it follows that also $l(v) <_R l(x_0)$. Furthermore, since $L(x_0) <_R R(w)$ and $P_w \ll_R P_v$, it follows that $L(x_0) <_R R(w) <_R L(v)$, and thus P_{x_0} intersects P_v in R and $\phi_{x_0} > \phi_v$.

Now, if x_0 is bounded, then $x_0v \in E$. Thus, $v \in V_0(u)$, since $x_0 \in V_0(u)$ and $v \notin N(u)$, which is a contradiction. Therefore, x_0 is unbounded, and thus $x_0v \notin E$. Then, since P_{x_0} intersects P_v in R and $\phi_{x_0} > \phi_v$, it follows that $N(x_0) \subseteq N(v)$ by Lemma 3. Recall now that there exists a bounded covering vertex u^* of u in G, and thus $u^*, x_0 \in V_0(u)$. Furthermore $u^* \neq x_0$, since u^* is bounded and x_0 is unbounded. Therefore, since $V_0(u)$ is connected, x_0 is adjacent to at least one other vertex $y \in V_0(u)$, and thus $y \in N(v)$, since $N(x_0) \subseteq N(v)$. It follows now that $v \in V_0(u)$, since $y \in V_0(u)$ and $v \notin N(u)$, which is again a contradiction.

Therefore, R' has no new adjacency wv that is not an adjacency in R, for any $w \in N_1$, i.e. R' is a projection representation of G. This completes the proof of the lemma. ■

Note that Lemma 8 implies, in particular, that the parallelograms of two bounded vertices intersect in R if and only if they intersect also in R'. Therefore, for every $w \in N(u)$ the value $L_0(w)$ remains the same in R and in R', i.e. for every $w \in N(u)$:

- $L_0(w) = \min_{R'}\{L(x) \mid x \in (V_B \setminus N(u)) \setminus V_0(u), P_w \ll_{R'} P_x\}$

Now we define the subset $N_2 \subseteq N(u)$ as follows:

- $N_2 = \{w \in N(u) \mid \ell_0 <_{R'} r(w)\}$

If $N_2 \neq \emptyset$, we define the value:

- $r_0 = \min_{R'}\{r(w) \mid w \in N_2\}$

Then, $r(u) <_{R'} r_0$ by Lemma 1, since $N_2 \subseteq N(u)$. Since the lower right endpoint $r(w)$ of all parallelograms P_w in R' is greater than or equal to the corresponding value $r(w)$ in R, it follows that $N(u) \setminus N_1 = \{w \in N(u) \mid \ell_0 <_R r(w)\} \subseteq \{w \in N(u) \mid \ell_0 <_{R'} r(w)\} = N_2$. Thus, $N(u) \setminus N_2 \subseteq N_1$ and $N_2 \cup (N_1 \setminus N_2) = N(u)$.

Define now the value:

- $L_0 = \min_{R'}\{L(x) \mid x \in (V_B \setminus N(u)) \setminus V_0(u), P_u \ll_{R'} P_x\}$

Again, L_0 is well defined, since in particular $t \in (V_B \setminus N(u)) \setminus V_0(u)$ and $P_u \ll_{R'} P_t$. The following property of the projection representation R' can be obtained easily by Transformation 1.

Lemma 9 *For all vertices $w \in N_1 \setminus N_2$, for which $R(w) <_{R'} L_0$, the values $R(w)$ lie immediately before L_0 in R'.*

Proof. Let $w \in N_1 \setminus N_2$. By definition of the sets N_1 and N_2, it follows that $r(w) <_R \ell_0$ and $r(w) <_{R'} \ell_0$ in both R and R'. Thus, $R(w)$ comes immediately before $L_0(w)$ in R' during Transformation 1. Consider now a vertex $x \in (V_B \setminus N(u)) \setminus V_0(u)$, such that $P_w \ll_R P_x$, i.e. $r(w) <_R l(x)$ and $R(w) <_R L(x)$. Then $r(u) <_R l(x)$, since $r(u) <_R r(w)$ by Lemma 1. Suppose that $L(x) <_R R(u)$. Then, P_x intersects P_u in R and $\phi_x > \phi_u$. Thus, since x is assumed to be bounded, it follows that $x \in N(u)$, which is a contradiction. Therefore $R(u) <_R L(x)$, and thus $P_u \ll_R P_x$, since also $r(u) <_R l(x)$. Furthermore, also $P_u \ll_{R'} P_x$, since P_u and P_x remain the same in both R and R'. That is, $P_u \ll_{R'} P_x$ for every $x \in (V_B \setminus N(u)) \setminus V_0(u)$, such that $P_w \ll_R P_x$. Therefore, it follows by the definitions of L_0 and of $L_0(w)$ that $L_0 \leq L_0(w)$. Thus, since $R(w)$ comes immediately before $L_0(w)$ in R' during Transformation 1, it follows that either $R(w)$ comes immediately before L_0 in R' during Transformation 1 (in the case where $L_0 = L_0(w)$) or $R(w) >_{R'} L_0$ (in the case where $L_0 < L_0(w)$). This completes the proof of the lemma. ■

For the example of Figure 4, the projection representation R' is illustrated in Figure 4(b). In this figure, $L_0 = L(y)$ and $r_0 = r(w_1)$, while $N_2 = \{w_1\}$ and $N_1 \setminus N_2 = \{w_2\}$.

If $N_2 = \emptyset$, then we set $R'' = R'$; otherwise, if $N_2 \neq \emptyset$, we construct the projection representation R'' from R' as follows.

Transformation 2 *For every $v \in V_0(u) \cap V_B$, such that $r(v) >_{R'} r_0$, move the right line of P_v in R' parallel to the left, such that $r(v)$ comes immediately before r_0 in L_2. Denote the resulting projection representation by R''.*

Lemma 10 *R'' is a projection representation of G.*

Proof. Denote by w_0 the vertex of N_2, such that $r_0 = r(w_0)$. Since we move the right line of some parallelograms to the left, i.e. we decrease some parallelograms, no new adjacencies are introduced in R'' in comparison to R'. Suppose that the adjacency vx has been removed from R' in R'', for some $v \in V_0(u) \cap V_B$, where $r(v) >_{R'} r_0 = r(w_0)$. Therefore, since we perform parallel movements of lines in R', i.e. since every angle ϕ_z in R'' equals the value of ϕ_z in R' for every vertex z of G, it follows that $P_v \ll_{R''} P_x$, while P_v intersects P_x in R'.

Since $w_0 \in N(u)$, and since the endpoints of P_{w_0} do not move during Transformation 2, it follows by Lemma 1 that $r(u) <_{R'} r(w_0)$ and $r(u) <_{R''} r(w_0)$. Thus, since $r(v)$ comes in R'' immediately before $r_0 = r(w_0)$, it follows that $r(u) <_{R''} r(v) <_{R''} r(w_0)$. Suppose that $x \in N(u)$. Then, $L(x) <_{R'} L(u)$ by Lemma 1, and thus also $L(x) <_{R''} L(u)$, since the left lines of all parallelograms do not move during Transformation 2. Therefore, $R(v) <_{R''} L(x) <_{R''} L(u) = R(u)$, since $P_v \ll_{R''} P_x$. That is, $r(u) <_{R''} r(v)$ and $L(v) \leq_{R''} R(v) <_{R''} R(u)$, and thus $\phi_v > \phi_u$ in both R' and R''. Furthermore, $L(v) <_{R'} R(u)$ (since also $L(v) <_{R''} R(u)$) and $r(u) <_{R'} r_0 = r(w_0) <_{R'} r(v)$, and thus P_v intersects P_u in R'. Therefore, since $v \in V_B$ and $\phi_v > \phi_u$ in R', it follows that $v \in N(u)$, which is a contradiction. Thus, $x \notin N(u)$.

Now, since by assumption $vx \in E$, and since $v \in V_0(u)$ and $x \notin N(u)$, it follows that $x \in V_0(u)$, and thus $l(x) \leq_R \ell_0$ by definition of ℓ_0. Therefore, since the left lines of all parallelograms do not move during Transformation 1, it follows that also $l(x) \leq_{R'} \ell_0$. Note that both $r_0 = r(w_0)$ and $l(x)$ do not move by Transformation 2. Therefore, since $r(v)$ comes by Transformation 2 in R'' immediately before r_0, and since $P_v \ll_{R''} P_x$, it follows that $r(v) <_{R''} r_0 = r(w_0) <_{R''} l(x)$. Finally, since both $r(w_0)$ and $l(x)$ do not move during Transformation 2, it follows that also $r(w_0) <_{R'} l(x)$ in R'. Thus, since $l(x) \leq_{R'} \ell_0$, it follows that $r(w_0) <_{R'} \ell_0$ in R', which is a contradiction, since $w_0 \in N_2$. Therefore, no adjacency vx has been removed from R' in R'', i.e. R'' is a projection representation of G. This completes the proof of the lemma. ■

Since by Transformation 2 only some endpoints of vertices $v \in V_0(u) \cap V_B$ are moved, it follows that the value L_0 does not change in R'', i.e.:

- $L_0 = \min_{R''}\{L(x) \mid x \in (V_B \setminus N(u)) \setminus V_0(u),\ P_u \ll_{R''} P_x\}$

The next property of the projection representation R'' follows by Lemma 9.

Corollary 1 *For all vertices $w \in N_1 \setminus N_2$, for which $R(w) <_{R''} L_0$, the values $R(w)$ lie immediately before L_0 in R''.*

Proof. Let x_0 be the vertex of $(V_B \setminus N(u)) \setminus V_0(u)$, such that $L_0 = L(x_0)$. Recall by Lemma 9 that for all vertices $w \in N_1 \setminus N_2$, for which $R(w) <_{R'} L_0$, the values $R(w)$ lie immediately before L_0 in R'. Furthermore, note that the parallelograms of all neighbors $w \in N(u)$ of u do not move by Transformation 2. Therefore, since also the value L_0 is the same in both R' and R'', it suffices to prove that there do not exist vertices $v \in V_0(u) \cap V_B$ and $w \in N_1 \setminus N_2$, such that $R(w) <_{R''} R(v) <_{R''} L_0$ in R''. Suppose otherwise that $R(w) <_{R''} R(v) <_{R''} L_0 = L(x_0)$ for two vertices $v \in V_0(u) \cap V_B$ and $w \in N_1 \setminus N_2$. Thus, since only the right lines of some parallelograms P_v, where $v \in V_0(u) \cap V_B$, are moved to the left by Transformation 2, it follows that $R(w) <_{R'} L_0 = L(x_0) <_{R'} R(v)$ in R'. Therefore, in particular P_v intersects P_{x_0} in R', and thus $v \in N(x_0)$, since both v and x_0 are bounded. Thus $x_0 \in V_0(u)$, since also $v \in V_0(u)$. This is a contradiction, since $x_0 \in (V_B \setminus N(u)) \setminus V_0(u)$. This completes the proof of the corollary. ■

The projection representation R'' for the example of Figure 4 is illustrated in Figure 4(c). We construct now the projection representation R''' from R'' as follows.

Transformation 3 *Move the line P_u in R'', such that its upper endpoint $L(u) = R(u)$ comes immediately before $\min_{R''}\{L_0, R(w) \mid w \in N_1 \setminus N_2\}$ and its lower endpoint $l(u) = r(u)$ comes immediately after $\max_{R''}\{r(v) \mid v \in V_0(u) \cap V_B\}$. Finally, make u a bounded vertex. Denote the resulting projection representation by R'''.*

The resulting projection representation R''' has $k-1$ unbounded vertices, since u is represented in R''' as a bounded vertex. The projection representation R''' for the example of Figure 4 is illustrated in Figure 4(d). In this figure, the new position of the trivial parallelogram (i.e. line) P_u that corresponds to the (bounded) vertex u is drawn in bold. Furthermore, for better visibility, the position of P_u in the previous projection representations R, R', and R'' is pointed by a non-bold dashed line; in this figure, a_u and b_u denote the endpoints of this old position of P_u on L_1 and on L_2, respectively.

Lemma 11 *R''' is a projection representation of G.*

Proof. The proof is done in two parts. In Part 1 we prove that u is adjacent in R''' to all vertices of $N(u)$, while in Part 2 we prove that u is not adjacent in R''' to any vertex of $V \setminus N[u]$.

Part 1. In this part we prove that u is adjacent in R''' to all vertices of $N(u)$. Denote by a_u and b_u the coordinates of the upper and lower endpoint of P_u in the initial projection representation R on L_1 and on L_2, respectively. Then, since the endpoints of P_u do not move by Transformations 1 and 2, a_u and b_u remain the endpoints of P_u also in the representations R' and R''; however, note that a_u and b_u are not the endpoints of P_u in R'''. Then, $L(w) <_{R''} a_u$ for every $w \in N(u)$ by Lemma 1, and thus also $L(w) <_{R'''} a_u$ for every $w \in N(u)$, since only the endpoints of P_u move during Transformation 3.

Note now that $a_u <_{R''} L_0$, since $L_0 = \min_{R''}\{L(x) \mid x \in (V_B \setminus N(u)) \setminus V_0(u), P_u \ll_{R''} P_x\}$. Furthermore, recall by Corollary 1 that for all vertices $w \in N_1 \setminus N_2$, for which $R(w) <_{R''} L_0$, the values $R(w)$ lie immediately before L_0 in R''. Therefore, in particular, $a_u <_{R''} R(w)$ for every $w \in N_1 \setminus N_2$, since $a_u <_{R''} L_0$, and thus $L(w) <_{R''} a_u <_{R''} R(w)$ for every $w \in N_1 \setminus N_2 \subseteq N(u)$ by the previous paragraph. Therefore, since $a_u <_{R''} L_0$, and since the upper endpoint $R(u)$ of the line P_u lies in R''' immediately before $\min_{R''}\{L_0, R(w) \mid w \in N_1 \setminus N_2\}$, cf. the statement of Transformation 3, it follows that also $L(w) <_{R'''} a_u <_{R'''} R(u) <_{R'''} R(w)$ for every $w \in N_1 \setminus N_2$. That is, $L(w) <_{R'''} R(u) <_{R'''} R(w)$ for every $w \in N_1 \setminus N_2$, and thus P_u intersects P_w in R''' for every $w \in N_1 \setminus N_2$. Therefore, since all vertices of $\{u\} \cup N_1 \setminus N_2$ are bounded in R''', u is adjacent in R''' to all vertices of $N_1 \setminus N_2$.

Consider now an arbitrary vertex $w \in N_2$. Recall that $r_0 = \min_{R'}\{r(w) \mid w \in N_2\}$, i.e. $r_0 \leq_{R'} r(w)$. Thus, since the endpoint $r(w)$ does not move by Transformation 2, it follows that also $r_0 \leq_{R''} r(w)$. Furthermore, by Transformation 2, $r(v) <_{R''} r_0 \leq_{R''} r(w)$ for every $v \in V_0(u) \cap V_B$. This holds clearly also in R''', i.e. $r(v) <_{R'''} r(w)$ for every $v \in V_0(u) \cap V_B$ and every $w \in N_2$. Since the lower endpoint of the line P_u comes immediately after $\max_{R''}\{r(v) \mid V_0(u) \cap V_B\}$ in R''', it follows that $r(v) <_{R'''} l(u) = r(u) <_{R'''} r(w)$ for every $v \in V_0(u) \cap V_B$ and every $w \in N_2$. Thus, since also $L(w) <_{R'''} a_u <_{R'''} R(u)$ for every $w \in N(u)$, it follows that P_u intersects P_w in R''' for every $w \in N_2$. Therefore, since all vertices of $\{u\} \cup N_2$ are bounded in R''', u is adjacent in R''' to all vertices of N_2. Thus, since $N_2 \cup (N_1 \setminus N_2) = N(u)$, u is adjacent in R''' to all vertices of $N(u)$.

Part 2. In this part we prove that u is not adjacent in R''' to any vertex of $V \setminus N[u]$. To this end, recall first by Lemma 4 that u^* is a bounded covering vertex of u in G (and thus $u^* \in V_0(u) \cap V_B$), such that P_u intersects P_{u^*} in R and $\phi_{u^*} < \phi_u$ in R. Therefore, $l(u^*) <_R l(u) = r(u)$ by Lemma 2, and thus also $l(u^*) <_{R''} r(u)$, since the endpoint $l(u^*)$ remains the same in the representations R, R', and R''. Recall that $L_0 = \min_{R''}\{L(x) \mid x \in (V_B \setminus N(u)) \setminus V_0(u), P_u \ll_{R''} P_x\}$. Denote by y_0 the vertex such that $L_0 = L(y_0)$, and thus $P_u \ll_{R''} P_{y_0}$. Therefore, since $l(u^*) <_{R''} r(u)$, it follows that $l(u^*) <_{R''} l(u) <_{R''} l(y_0)$. Since $u^* \in V_0(u)$ and $y_0 \notin N(u) \cup V_0(u)$, it follows that $u^*y_0 \notin E$. Therefore, since both u^* and y_0 are bounded vertices, P_{u^*} does not intersect P_{y_0} in R'', and thus $P_{u^*} \ll_{R''} P_{y_0}$, since $l(u^*) <_{R''} l(y_0)$. Moreover, since by Transformation 3 only the line P_u is moved, it follows that also $P_{u^*} \ll_{R'''} P_{y_0}$.

Since by Transformation 1 only some endpoints of vertices $w \in N_1 \subseteq N(u)$ are moved, the value $R(u^*)$ remains the same in R and in R'. Furthermore, $r(u) <_{R'} r_0$ by definition of r_0 and by Lemma 1. Suppose that the right line of P_{u^*} is moved during Transformation 2. Then, $r(u) <_{R'} r_0 <_{R'} r(u^*)$, while $r(u^*)$ comes immediately before r_0 in R'', i.e. $r(u) <_{R''} r(u^*) <_{R''} r_0$, since r_0 does not move during Transformation 2. Therefore, since $l(u^*) <_R l(u)$ by Lemma 2 (and thus also $l(u^*) <_{R''} l(u)$), it follows that P_{u^*} still intersects P_u in R''.

Denote by v_0 the vertex of $V_0(u) \cap V_B$, such that $r(v_0) = \max_{R''}\{r(v) \mid v \in V_0(u) \cap V_B\}$, cf. the statement of Transformation 3. Since $v_0 \in V_0(u)$ and $y_0 \notin N(u) \cup V_0(u)$, it follows that $v_0 y_0 \notin E$. Therefore, since both v_0 and y_0 are bounded vertices, either $P_{y_0} \ll_{R''} P_{v_0}$ or $P_{v_0} \ll_{R''} P_{y_0}$. Suppose that $P_{y_0} \ll_{R''} P_{v_0}$, and thus $P_{u^*} \ll_{R''} P_{y_0} \ll_{R''} P_{v_0}$. Then, since $u^*, v_0 \in V_0(u)$ and since $V_0(u)$ is connected, there exists at least one vertex $v \in V_0(u)$, such that P_v intersects P_{y_0} in R''. Similarly, since $y_0 \notin N(u) \cup V_0(u)$, it follows that $vy_0 \notin E$. Therefore, since y_0 is a bounded vertex, v must be an unbounded vertex with $\phi_v > \phi_{y_0}$, and thus $N(v) \subseteq N(y_0)$ by Lemma 3. Then, $N(v)$ includes at least one vertex $v' \in V_0(u)$, and thus $v' \in N(y_0)$. Therefore, $y_0 \in V_0(u)$, which is a contradiction. Thus, $P_{v_0} \ll_{R''} P_{y_0}$. Moreover, since by Transformation 3 only the line P_u is moved, it follows that also $P_{v_0} \ll_{R'''} P_{y_0}$.

We will prove in the following that u is not adjacent in R''' to any vertex $x \notin N(u)$. For the sake of contradiction, suppose that P_x intersects P_u in R''', for some vertex $x \notin N(u)$. We distinguish in the following the cases regarding x.

Case 2a. $x \in V_B \setminus N(u)$ (i.e. x is bounded) and $x \in V_0(u)$. Then, $r(x) \leq_{R''} r(v_0)$ and $r(u^*) \leq_{R''} r(v_0)$ by definition of v_0, and thus also $r(x) \leq_{R'''} r(v_0)$ and $r(u^*) \leq_{R'''} r(v_0)$. Therefore, by Transformation 3, $r(x) \leq_{R'''} r(v_0) <_{R'''} l(u)$, i.e. $r(x) <_{R'''} l(u)$, and thus $L(u) <_{R'''} R(x)$, since we assumed that P_x intersects P_u in R'''. Furthermore, $r(x) \leq_{R'''} r(v_0) <_{R'''} l(y_0)$, i.e. $r(x) <_{R'''} l(y_0)$, since $P_{v_0} \ll_{R'''} P_{y_0}$. Recall by Corollary 1 that for all vertices $w \in N_1 \setminus N_2$, for which $R(w) <_{R''} L_0 = L(y_0)$, the values $R(w)$ lie immediately before L_0 in R'', and thus also in R'''. Thus, since $L(u) <_{R'''} R(x)$, and since the upper endpoint $L(u) = R(u)$ of P_u comes immediately before $\min\{L_0, R(w) \mid w \in N_1 \setminus N_2\}$ in R''', it follows that $L(u) <_{R'''} L_0 = L(y_0) <_{R'''} R(x)$. Therefore, since also $r(x) <_{R'''} l(y_0)$, P_x intersects P_{y_0} in R''', and thus also in R''. Then $xy_0 \in E$, since both x and y_0 are bounded, and therefore $y_0 \in V_0(u)$, which is a contradiction. It follows that P_x does not intersect P_u in R''' for every $x \in V_B \setminus N(u)$, such that $x \in V_0(u)$. In particular, since $u^*, v_0 \in V_B \setminus N(u)$ and $u^*, v_0 \in V_0(u)$, it follows that neither P_{u^*} nor P_{v_0} intersects P_u in R'''. Therefore, since $r(u^*) \leq_{R'''} r(v_0) <_{R'''} l(u)$ by Transformation 3, it follows that $P_{u^*} \ll_{R'''} P_u$ and $P_{v_0} \ll_{R'''} P_u$.

Case 2b. $x \in V_B \setminus N(u)$ (i.e. x is bounded) and $x \notin V_0(u)$. Then, $u^* x \notin E$, since $u^* \in V_0(u)$. Furthermore, since both x and u^* (resp. v_0) are bounded vertices, P_{u^*} (resp. P_{v_0}) does not intersect P_x in R''', i.e. either $P_x \ll_{R'''} P_{u^*}$ or $P_{u^*} \ll_{R'''} P_x$ (resp. either $P_x \ll_{R'''} P_{v_0}$ or $P_{v_0} \ll_{R'''} P_x$). If $P_x \ll_{R'''} P_{u^*}$ (resp. $P_x \ll_{R'''} P_{v_0}$), then $P_x \ll_{R'''} P_{u^*} \ll_{R'''} P_u$ (resp. $P_x \ll_{R'''} P_{v_0} \ll_{R'''} P_u$) by the previous paragraph. This is a contradiction to the assumption that P_x intersects P_u in R'''. Therefore $P_{u^*} \ll_{R'''} P_x$ and $P_{v_0} \ll_{R'''} P_x$, and thus also $P_{u^*} \ll_{R''} P_x$ and $P_{v_0} \ll_{R''} P_x$. Thus, in particular $r(v_0) <_{R'''} l(x)$. Furthermore, the lower endpoint $l(u) = r(u)$ of P_u comes by Transformation 3 immediately after $r(v_0)$ in R''', and thus $r(v_0) <_{R'''} r(u) <_{R'''} l(x)$. Then $L(x) <_{R'''} R(u)$, since we assumed that P_x intersects P_u in R'''.

We distinguish now the cases according to the relative positions of P_u and P_x in R''. If $P_x \ll_{R''} P_u$, then $P_{u^*} \ll_{R''} P_x \ll_{R''} P_u$ by the previous paragraph, which is a contradiction, since P_{u^*} intersects P_u in R'', as we proved above. If $P_u \ll_{R''} P_x$, then $L_0 \leq_{R''} L(x)$, since $x \in (V_B \setminus N(u)) \setminus V_0(u)$ and $L_0 = \min_{R''}\{L(x) \mid x \in (V_B \setminus N(u)) \setminus V_0(u), P_u \ll_{R''} P_x\}$. Thus $R(u) <_{R'''} L_0 \leq_{R'''} L(x)$ by Transformation 3, which is a contradiction, since $L(x) <_{R'''} R(u)$ by the previous paragraph. If P_u intersects P_x in R'', then $\phi_x < \phi_u$ in R'', since x is bounded, u is unbounded, and $x \notin N(u)$. Therefore, $N(u) \subseteq N(x)$ by Lemma 3, and thus x is a covering vertex of u, i.e. $x \in V_0(u)$, which is a contradiction to the assumption of Case 2b. Thus, P_x does not intersect P_u in R''', for every $x \in V_B \setminus N(u)$, such that $x \notin V_0(u)$.

Case 2c. $x \in V_U$ (i.e. x is unbounded), such that $\phi_x < \phi_u$ in R'''. Then, since both P_x and P_u are lines in R''', it follows that $l(x) <_{R'''} l(u)$ and $R(x) >_{R'''} R(u)$. Thus, by Transformation 3, $l(x) <_{R'''} r(v_0) <_{R'''} l(u)$ and $R(u) <_{R'''} L_0 = L(y_0) <_{R'''} R(x)$. Since $P_{v_0} \ll_{R'''} P_{y_0}$, it follows that P_x intersects both P_{v_0} and P_{y_0} in R''' (and thus also in R''), and that $\phi_x < \phi_{v_0}$ and $\phi_x < \phi_{y_0}$. Therefore, since both v_0 and y_0 are bounded, it follows that $x \in N(v_0)$ and $x \in N(y_0)$. Thus $x, y_0 \in V_0(u)$, since $v_0 \in V_0(u)$. This is a contradiction, since $y_0 \notin V_0(u)$ by definition of y_0. It follows that P_x does not intersect P_u in R''' for every $x \in V_U$, for which $\phi_x < \phi_u$ in R'''.

Case 2d. $x \in V_U$ (i.e. x is unbounded), such that $\phi_x > \phi_u$ in R'''. Then the line P_x lies above P_u in R''', i.e. P_x does not intersect P_u in R''', which is a contradiction to the assumption on vertex x.

Thus P_x does not intersect P_u in R''' for every $x \in V_U$, for which $\phi_x > \phi_u$ in R'''.

Summarizing, due to Part 1 and due to Cases 2a, 2b, 2c, and 2d of Part 2, it follows that P_u intersects in R''' only the parallelograms P_z, for every $z \in N(u)$. Thus R''' is a projection representation of G, since R'' is a projection representation of G by Lemma 10. This completes the proof of the lemma. ■

Thus, due to Lemma 11, $R^* = R'''$ is a projection representation of G with $k-1$ unbounded vertices. This completes the proof of Theorem 1. ■

3.2 The case where u has neither the left nor the right border property

In this section we consider graphs in (Tolerance ∩ Trapezoid) \ Bounded Tolerance that admit a projection representation, in which there is no unbounded vertex u with the right or the left border property. The proof of the main Theorem 2 of this section is based on the fact that G has simultaneously a projection representation R and a trapezoid representation R_T. In this theorem we choose a certain unbounded vertex u of G and we prove that there is another projection representation R^* of G, in which u has been replaced by a bounded vertex. First, we introduce in the following the notion of *neighborhood maximality* for unbounded vertices in a tolerance graph.

Definition 6 *Let G be a tolerance graph, R be a projection representation of G, and u be an unbounded vertex in R. Then, u is* unbounded-maximal *if there exists no unbounded vertex v in R, such that $N(u) \subset N(v)$.*

This notion of an unbounded-maximal vertex will be used in Lemma 13, in order to obtain for an arbitrary tolerance graph G a projection representation with a special property. Before we present Lemma 13, we first present the next auxiliary lemma.

Lemma 12 *Let G be a tolerance graph, R be a projection representation of G, and u be an unbounded-maximal vertex of G in R. Then, there exists a projection representation R^* of G with the same unbounded vertices, such that $\phi_u < \phi_v$ for every unbounded vertex $v \neq u$, for which $N(v) \subset N(u)$.*

Proof. First, recall that we can assume w.l.o.g. that all angles of the parallelograms in a projection representation are distinct [13, 15, 18]. We will construct the projection representation R^* of G as follows. Let u be an unbounded-maximal vertex of G in R and let $v \neq u$ be an arbitrary unbounded vertex of G in R, such that $N(v) \subset N(u)$ and $\phi_v < \phi_u$. Suppose first that P_u intersects P_v in R. Then, since $uv \notin E$ and $\phi_v < \phi_u$, it follows that $N(u) \subseteq N(v)$ by Lemma 3, which is a contradiction.

Suppose now that P_v does not intersect P_u in R. Let $P_u \ll_R P_v$, i.e. $r(u) <_R r(v)$ and $L(u) <_R L(v)$. Furthermore, let $\Delta = r(v) - r(u)$. Since for every $w \in N(v)$, it holds also $w \in N(u)$, it follows by Lemma 1 that $r(u) <_R r(v) <_R r(w)$ and $L(w) <_R L(u) <_R L(v)$ for every $w \in N(v) \subset N(u)$. Furthermore, $\phi_w > \phi_u > \phi_v$ for every $w \in N(v) \subset N(u)$. We can now move the upper endpoint $L(v)$ of the line P_v in R to the point $L(u) + \Delta - \varepsilon$, for a sufficiently small positive number $\varepsilon > 0$. In the resulting projection representation R', $\phi_u < \phi_v$.

We will prove that R' is a projection representation of the same graph G. Indeed, consider first a vertex $w \in N(v)$. Then, $r(u) <_{R'} r(v) <_{R'} r(w)$ and $L(w) <_{R'} L(u) <_{R'} L(v) = L(u) + \Delta - \varepsilon$. Furthermore, $\phi_u < \phi_v < \phi_w$, since $\varepsilon > 0$ has been chosen to be sufficiently small. Therefore, P_v still intersects P_w in R' and $\phi_v < \phi_w$ for every $w \in N(v)$, i.e. v remains adjacent in R' to all vertices $w \in N(v)$.

Suppose now that v obtains a new adjacency with a vertex y in R'. Then, due to Lemma 1, y is bounded in both R and R', $r(v) <_{R'} r(y)$ and $L(y) <_{R'} L(v)$. Since the lower endpoint $r(v)$ of P_v remains the same in both R and R', and since the upper endpoint $L(v)$ of P_v in R' is to the left of the upper endpoint of P_v in R, it follows that also $r(v) <_R r(y)$ and $L(y) <_R L(v)$, i.e. P_y intersects P_v also in R. Thus, since the angle ϕ_v in R is smaller than the corresponding angle ϕ_v in R', it follows that y is adjacent to v also in R, i.e. $y \in N(v)$, which is a contradiction. Therefore, v does not obtain

any new adjacency in R'. Thus, v is adjacent in R' to exactly the vertices $w \in N(v)$, i.e. R' is a projection representation of the same tolerance graph G.

The case where $P_v \ll_R P_u$ is symmetric. Namely, in this case let $\Delta = L(u) - L(v)$; then, construct the projection representation R' by moving the lower endpoint $r(v)$ of the line P_v in R to the point $r(u) - \Delta + \varepsilon$, for a sufficiently small positive number $\varepsilon > 0$. Similarly, the resulting projection representation R' is a projection representation of G, while $\phi_u < \phi_v$.

We repeat the above procedure, as long as there exists an unbounded vertex $v \neq u$ in R, such that $N(v) \subset N(u)$ and $\phi_v < \phi_u$. The resulting projection representation R^* of G satisfies the conditions of the lemma. ■

We are now ready to present Lemma 13.

Lemma 13 *Let G be a tolerance graph and R be a projection representation of G with at least one unbounded vertex. Then, there exists a projection representation R^* of G with the same unbounded vertices, such that the unbounded vertex u, for which $\phi_u = \min\{\phi_x \mid x \in V_U\}$ in R^*, is unbounded-maximal.*

Proof. Recall that V_U denotes the set of unbounded vertices of G in R. Let $S = \{u \in V_U \mid u$ is unbounded-maximal$\}$. Furthermore, let R' be the projection representation obtained by applying for every $u \in S$ the procedure described in the proof of Lemma 12. Then, R' has the same unbounded vertices V_U, while $\phi_u < \phi_v$ for every $u \in S$ and every unbounded vertex $v \neq u$, for which $N(v) \subset N(u)$. We choose now u to be that unbounded vertex, for which $\phi_u = \min\{\phi_x \mid x \in S\}$. Then, u satisfies the conditions of the lemma. ■

Assume that there exists a graph $G \in$ (Tolerance $\cap$ Trapezoid) $\setminus$ Bounded Tolerance, and let G have the smallest number of vertices. Furthermore, let R and R_T be a canonical projection and a trapezoid representation of G, respectively, and u be an arbitrary unbounded vertex of G in R. Then $V_0(u) \neq \emptyset$ by Lemma 4, and thus also $V_0(u)$ is connected by Lemma 6. Therefore, since u is not adjacent to any vertex of $V_0(u)$ by Definition 4, it follows that in the trapezoid representation R_T either all trapezoids of $V_0(u)$ lie to the left, or all to the right of T_u.

Consider first the case where all trapezoids of $V_0(u)$ lie to the *left* of T_u in R_T, i.e. $T_x \ll_{R_T} T_u$ for every $x \in V_0(u)$. Recall by Lemma 7 that $N(v) \neq N(u)$ for every unbounded vertex $v \neq u$ in R. Denote by $Q_u = \{v \in V_U \mid N(v) \subset N(u)\}$ the set of unbounded vertices v of G in R, whose neighborhood set is strictly included in the neighborhood set of u. The next lemma follows easily by the definition of Q_u.

Lemma 14 *For every $v \in Q_u$, every covering vertex u^* of u is also a covering vertex of v. Furthermore, $Q_u \cap V_0(u) = \emptyset$.*

Proof. Since u^* is a covering vertex of u by assumption, $u^* \notin N(u)$ and $N(u) \subseteq N(u^*)$ by Definition 4. Let $v \in Q_u$. Then, since $N(v) \subset N(u)$ and $u^* \notin N(u)$, it follows that $u^* \notin N(v)$. Furthermore, $N(v) \subset N(u) \subseteq N(u^*)$, and thus u^* is a covering vertex of v by Definition 4.

To prove that $Q_u \cap V_0(u) = \emptyset$, consider a *bounded* covering vertex u^* of u (such a vertex always exists by Lemma 4). Suppose that $v \in V_0(u)$. Then, v is an isolated vertex in $G \setminus N[u]$, since $N(v) \subset N(u)$. Thus, since v is unbounded and u^* is bounded, i.e. $v \neq u^*$, it follows that v and u^* do not lie in the same connected component of $V_0(u)$, i.e. $V_0(u)$ is not connected, which is a contradiction. Thus, $v \notin V_0(u)$ for every $v \in Q_u$, i.e. $Q_u \cap V_0(u) = \emptyset$. ■

Since no two unbounded vertices are adjacent, it follows in particular that T_v does not intersect T_u in R_T, for any $v \in Q_u$. Therefore, we can partition the set Q_u into the two subsets $Q_1(u) = \{v \in Q_u \mid T_v \ll_{R_T} T_u\}$ and $Q_2(u) = \{v \in Q_u \mid T_u \ll_{R_T} T_v\}$. That is, $Q_1(u)$ (resp. $Q_2(u)$) includes those vertices $v \in Q(u)$ whose trapezoid T_v lies to the left (resp. to the right) of the trapezoid T_u in the trapezoid representation R_T.

Consider now a vertex $v \in Q_1(u) \subseteq Q_u$. Note that for every $x \in V_0(u)$, T_v does not intersect T_x in R_T, since otherwise $v \in V_0(u)$, which is a contradiction by Lemma 14. Therefore, since in particular

$V_0(u)$ is connected by Lemma 6, it follows that for every $x \in V_0(u)$, either $T_v \ll_{R_T} T_x$ or $T_x \ll_{R_T} T_v$. We will now prove that $T_v \ll_{R_T} T_x$ for every $x \in V_0(u)$. Suppose otherwise that $T_x \ll_{R_T} T_v$ for every $x \in V_0(u)$. Then, since $v \in Q_1(u)$, it follows that $T_x \ll_{R_T} T_v \ll_{R_T} T_u$ for every $x \in V_0(u)$. Therefore, since $V_0(u)$ includes all covering vertices of u by Definition 4, it follows that $T_{x_0} \ll_{R_T} T_v \ll_{R_T} T_u$ for every covering vertex x_0 of u. Thus, since $N(u) \subseteq N(x_0)$, it follows that T_z intersects T_v in R_T for every $z \in N(u) \subseteq N(x_0)$. Therefore $N(v) \subseteq N(u)$, which is a contradiction, since $v \in Q_1(u) \subseteq Q_u$. Therefore $T_v \ll_{R_T} T_x$ for every $v \in Q_1(u)$ and every $x \in V_0(u)$, i.e. $Q_1(u) = \{v \in Q_u \mid T_v \ll_{R_T} T_x$ for every $x \in V_0(u)\}$.

Consider now the case where all trapezoids of $V_0(u)$ lie to the *right* of T_u in R_T, i.e. $T_u \ll_{R_T} T_x$ for every $x \in V_0(u)$. Then, by performing vertical axis flipping of R_T, we partition similarly to the above the set Q_u into the sets $Q_1(u)$ and $Q_2(u)$. That is, in this (symmetric) case the sets $Q_1(u)$ and $Q_2(u)$ will be $Q_1(u) = \{v \in Q_u \mid T_x \ll_{R_T} T_v$ for every $x \in V_0(u)\}$ and $Q_2(u) = \{v \in Q_u \mid T_v \ll_{R_T} T_u\}$.

In the following we define three conditions on G, regarding the unbounded vertices of G in R.

Condition 1 *The projection representation R of G has exactly one unbounded vertex.*

Condition 2 *For every unbounded vertex u of G in R, $Q_u = \emptyset$; namely, all unbounded vertices are unbounded-maximal.*

Condition 3 *For every unbounded vertex u of G in R, $Q_2(u) = \emptyset$, i.e. $Q_u = Q_1(u)$.*

The third condition depends also on the trapezoid representation R_T of G. The second condition is weaker than the first one, while the third condition is weaker than the other two, as stated next.

Observation 2 *Condition 1 implies Condition 2, and Condition 2 implies Condition 3.*

In the remainder of the section we assume that Condition 3 holds. We present now the main theorem of this section.

Theorem 2 *Let $G = (V, E) \in$ (Tolerance $\cap$ Trapezoid) $\setminus$ Bounded Tolerance with the smallest number of vertices. Let R_T be a trapezoid representation of G and R be a projection representation of G with k unbounded vertices. If G satisfies Condition 3, there exists a projection representation R^* of G with $k-1$ unbounded vertices.*

Proof (sketch). The complete technical analysis of the proof can be found in Section 4. The proof is done constructively, by exploiting the fact that G can be represented by both the projection representation R and the trapezoid representation R_T.

If at least one unbounded vertex of G in R has the right or the left border property, there exists by Theorem 1 a projection representation R^* of G with $k-1$ unbounded vertices, where all unbounded vertices of R^* are also unbounded vertices in R. Suppose that no unbounded vertex of G in R has either the right or the left border property in R. Let u be the unbounded vertex in R, such that $\phi_u = \min\{\phi_x \mid x \in V_U\}$ in R; then, we may assume by Lemma 13 that u is an unbounded-maximal vertex of G. By performing vertical axis flipping of R_T if needed, we may assume w.l.o.g. that all trapezoids of $V_0(u)$ lie to the *left* of T_u in R_T, i.e. $T_x \ll_{R_T} T_u$ for every $x \in V_0(u)$.

We now construct a projection representation R^* of the same graph G, in which u is replaced by a bounded vertex, while all other $k-1$ unbounded vertices of R remain also unbounded in R^*. We start by constructing a subgraph G_0 of G (cf. Section 4.6), such that $u \in V(G_0)$ and all vertices of $V(G_0) \setminus \{u\}$ are bounded. Then, we prove that $G_0 \setminus \{u\}$ is a module in $G \setminus \{u\}$ (cf. Lemma 36 in Section 4.6), by exploiting the fact that G can be represented by both R and R_T. That is, we prove that $N(v) \setminus V(G_0) = N(v') \setminus V(G_0)$ for all vertices $v, v' \in V(G_0) \setminus \{u\}$. Furthermore, we define in a particular way a line segment ℓ with endpoints on the lines L_1 and L_2, respectively (cf. Section 4.7). Then, we replace the parallelograms of the vertices of G_0 in R by a particular projection representation R_0 of G_0, which is ε-squeezed with respect to the line segment ℓ. We denote the resulting projection representation by R_ℓ (cf. Section 4.7). Then we prove that $R_\ell \setminus \{u\}$ is a projection representation of the graph $G \setminus \{u\}$ (cf. Section 4.8) – although R_ℓ is not necessarily a projection representation of G – and that u has the right border property in R_ℓ. Then, similarly to Transformations 1, 2, and 3

in the proof of Theorem 1, we apply three other transformations to R_ℓ (Transformations 4, 5, and 6, respectively, cf. Sections 4.9-4.10), obtaining thus the projection representations R'_ℓ, R''_ℓ, and R'''_ℓ, respectively. Then we set $R^* = R'''_\ell$, and we prove that R^* is a projection representation of the graph G itself (cf. Lemma 43 in Section 4.10). Moreover, R^* has the same unbounded vertices as R except for u (which became bounded in R^*), and thus R^* has $k-1$ unbounded vertices. This completes the proof of Theorem 2. ■

Note that, within the proof of Theorem 2 (see Section 4), we mainly use the facts that u is an unbounded-maximal vertex of G and that the angle ϕ_u of u is the smallest among all unbounded vertices in R. On the contrary, the assumption that G satisfies Condition 3 is used only for a technical part of the proof, namely that $G_0 \setminus \{u\}$ is a module in $G \setminus \{u\}$ (cf. Lemma 36 in Section 4).

3.3 The general case

The next main theorem follows by recursive application of Theorem 2.

Theorem 3 *Let $G = (V, E) \in$ (Tolerance $\cap$ Cocomparability), R_T be a trapezoid representation of G, and R be a projection representation of G. Then, assuming that G satisfies one of the Conditions 1, 2, or 3, G is a bounded tolerance graph.*

Proof. First note that $G \in$ (Tolerance $\cap$ Trapezoid) by Lemma 5. Suppose that G is not a bounded tolerance graph. We can assume w.l.o.g. that G has the smallest number of vertices among the graphs in (Tolerance $\cap$ Trapezoid) $\setminus$ Bounded Tolerance. Let R_0 be a projection representation of G with the smallest possible number k_0 of unbounded vertices. Note that $k_0 \geq 1$; indeed, if otherwise $k_0 = 0$, then G is a bounded tolerance graph, which is a contradiction to the assumption on G. Suppose that the projection representation R of G has k unbounded vertices, where $k \geq k_0$. Then, there exists by Theorem 2 a projection representation R^* of G with $k-1$ unbounded vertices. In particular, due to the proof of Theorem 2, R^* has the same unbounded vertices as R, except for u (which became bounded in R^*).

Suppose first that Condition 1 holds for the projection representation R of G, i.e. the projection representation R of G has exactly one unbounded vertex. Then $k = k_0 = 1$, and thus R^* has no unbounded vertex, i.e. R^* is a parallelogram representation of G. This is a contradiction to the assumption that G is not a bounded tolerance (i.e. parallelogram) graph. Suppose now that Condition 2 holds for R, i.e. all unbounded vertices in R are unbounded-maximal. Then Condition 2 also holds for R^*, since all unbounded vertices of R^* are also unbounded vertices of R. Suppose finally that Condition 3 holds for R and R_T, i.e. $Q_2(u) = \emptyset$ for every unbounded vertex u in R. Then Condition 3 holds also for the pair R^* and R_T of representations of G, since for every unbounded vertex u in R^* the set $Q_2(u)$ depends only on the trapezoid representation R_T.

Therefore, we can apply iteratively $k - k_0 + 1$ times the constructive proof of Theorem 2, obtaining eventually a projection representation R^{**} of G with $k_0 - 1$ unbounded vertices. This is a contradiction to the minimality of k_0. Therefore, G is a bounded tolerance graph. This completes the proof of the theorem. ■

As an immediate implication of Theorem 3, we prove in the next corollary that Conjecture 1 is true in particular for every graph G that has no three independent vertices a, b, c such that $N(a) \subset N(b) \subset N(c)$, since Condition 2 is guaranteed to be true for every such graph G. Therefore the conjecture is also true for the complements of triangle-free graphs. Thus, since in particular no bipartite graph has a triangle, the next corollary immediately implies the correctness of Conjecture 1 for the complements of trees and of bipartite graphs, which were the only known results until now [1, 21].

Corollary 2 *Let $G = (V, E) \in$ (Tolerance $\cap$ Cocomparability). Suppose that there do not exist three independent vertices $a, b, c \in V$ such that $N(a) \subset N(b) \subset N(c)$. Then, G is a bounded tolerance graph.*

Proof. Due to Theorem 3, it suffices to prove that Condition 2 is true for G, with respect to *any possible* canonical (projection) representation R and *any* trapezoid representation R_T of G. Let R be a canonical representation of G. Suppose that Condition 2 is not true for G. Then, there exists an unbounded vertex $u \in V_U$ such that $Q_u \neq \emptyset$. That is, there exists by the definition of the set Q_u an unbounded vertex $v \in V_U \setminus \{u\}$ such that $N(v) \subset N(u)$. Note that $v \notin N(u)$, since no two unbounded vertices are adjacent in G. Furthermore, there exists at least one covering vertex u^* of u in G, since $V_0(u) \neq \emptyset$ (cf. Lemma 4), and thus $u^* \notin N(u)$ and $N(u) \subset N(u^*)$. Therefore, since $N(v) \subset N(u)$ and $u^* \notin N(u)$, it follows that also $u^* \notin N(v)$, i.e. the vertices v, u, u^* are independent. Moreover $N(v) \subset N(u) \subset N(u^*)$, which comes in contradiction to the assumption of the lemma. Therefore Condition 2 holds for G, and thus G is a bounded tolerance graph by Theorem 3. ■

We now formally define the notion of a *minimally unbounded tolerance graph.*

Definition 7 *Let $G \in$* Tolerance $\setminus$ Bounded Tolerance. *If $G \setminus \{u\}$ is a bounded tolerance graph for every vertex of G, then G is a* minimally unbounded tolerance *graph.*

Assume now that Conjecture 1 is not true, and let G be a counterexample with the smallest number of vertices. Then, in particular, G is a tolerance but not a bounded tolerance graph; furthermore, since G has the smallest number of vertices, the removal of any vertex of G makes it a bounded tolerance graph. That is, G is a minimally unbounded tolerance graph by Definition 7. Now, if our Conjecture 2 is true (see Section 1), then G has a projection representation R with exactly one unbounded vertex, i.e. R satisfies Condition 1. Thus, G is a bounded tolerance graph by Theorem 3, which is a contradiction, since G has been assumed to be a counterexample to Conjecture 1. Thus, we obtain the following theorem.

Theorem 4 *Conjecture 2 implies Conjecture 1.*

Therefore, in order to prove Conjecture 1, it suffices to prove Conjecture 2. Moreover, to the best of our knowledge, all known examples of minimally unbounded tolerance graphs have a tolerance representation with exactly one unbounded vertex; for such examples, see e.g. [13].

4 Detailed proof of Theorem 2

In this section we provide the detailed proof of Theorem 2. For convenience of the presentation, the proof is organized into the Subsections 4.1-4.11. Let $G = (V, E) \in$ (Tolerance $\cap$ Trapezoid) $\setminus$ Bounded Tolerance with the smallest number of vertices. Furthermore let R_T be a trapezoid representation of G and R be a projection representation of G with k unbounded vertices. Assume that G satisfies Condition 3 (cf. Section 3.2). We will prove that there exists a projection representation R^* of G with $k-1$ unbounded vertices.

We may assume w.l.o.g. by the minimality of the number of vertices of G that G is connected. If R is not a canonical representation of G, then there exists a projection representation of G with $k-1$ unbounded vertices by Definition 1. Suppose for the remainder of the proof that R is a canonical representation of G. Due to Theorem 1 we may assume in the following that no unbounded vertex of G in R has either the right or the left border property in R. Let u be the unbounded vertex in R, such that $\phi_u = \min\{\phi_x \mid x \in V_U\}$ in R. The proof is done constructively, by exploiting the fact that G can be represented by both the projection representation R and the trapezoid representation R_T. Namely, we will construct a projection representation R^* of the same graph G, in which u is replaced by a bounded vertex, while all other $k-1$ unbounded vertices of R remain also unbounded in R^*.

By Lemma 4, there exists at least one bounded covering vertex u^* of u, such that P_{u^*} intersects P_u in R and $\phi_{u^*} < \phi_u$. Therefore, $V_0(u) \neq \emptyset$, and thus $V_0(u)$ is connected by Lemma 6. Since $V_0(u)$ is connected, and since u is not adjacent to any vertex of $V_0(u)$, it follows that either all trapezoids of $V_0(u)$ lie to the left, or all to the right of T_u in R_T. By performing vertical axis flipping of R_T if needed, we may assume w.l.o.g. that all trapezoids of $V_0(u)$ lie to the *left* of T_u in R_T, i.e. $T_x \ll_{R_T} T_u$

for every $x \in V_0(u)$. Moreover, we may assume w.l.o.g. by Lemma 13 that u is an unbounded-maximal vertex of G. Recall by Lemma 7 that $N(v_1) \neq N(v_2)$ for any two unbounded vertices v_1, v_2. Denote now by $Q_u = \{v \in V_U \mid N(v) \subset N(u)\}$. Furthermore, since we assumed that Condition 3 holds, $Q_u = Q_1(u) = \{v \in Q_u \mid T_v \ll_{R_T} T_x \text{ for every } x \in V_0(u)\}$.

4.1 The vertex sets D_1, D_2, S_2, and $\widetilde{X}_1$ and the vertex x_2

Recall that, whenever it is clear from the context, we may not distinguish between a vertex set and the induced subgraph on the vertices of this set. First we define the following vertex sets:

- $D_1 = D_1(u, R) = \{v \in V_0(u) \mid P_v \ll_R P_u\}$
- $D_2 = D_2(u, R) = \{v \in V_0(u) \mid P_u \ll_R P_v\}$
- $S_2 = S_2(u, R) = \{v \in V_0(u) \mid P_v \not\ll_R P_u\}$

For simplicity reasons, we will refer in the following to the sets $D_1(u, R)$, $D_2(u, R)$, and $S_2(u, R)$ just by D_1, D_2, and S_2, respectively. Note that $V_0(u) = D_1 \cup S_2$ and that $D_2 \subseteq S_2$. Furthermore note that $Q_u \cap D_1 = \emptyset$, $Q_u \cap D_2 = \emptyset$, and $Q_u \cap S_2 = \emptyset$, since $D_1, D_2, S_2 \subseteq V_0(u)$ and by Lemma 14.

Since u does not have the right border property in R, there exist by Definition 5 vertices $w \in N(u)$ and $x \in V_0(u)$, such that $P_w \ll_R P_x$. Therefore, in particular, $r(w) <_R l(x)$. Since u is unbounded in R, and since $w \in N(u)$, Lemma 1 implies that $r(u) <_R r(w)$, and thus $r(u) <_R l(x)$. For the sake of contradiction, suppose that $L(x) <_R R(u)$. Then, P_x intersects P_u in R and $\phi_x > \phi_u$. Thus, x is unbounded in R, since otherwise $x \in N(u)$, which is a contradiction. Furthermore, $N(x) \subseteq N(u)$ by Lemma 3, and thus $x \in Q_u$, which is a contradiction by Lemma 14, since $x \in V_0(u)$. Therefore, $R(u) <_R L(x)$, and thus $P_u \ll_R P_x$, since also $r(u) <_R l(x)$. That is, $x \in D_2$. Since u has not the left border property in R, there exist vertices $w' \in N(u)$ and $y \in V_0(u)$, such that $P_y \ll_R P_{w'}$. Therefore, in the reverse projection representation $\widehat{R}$ of R, $P_{w'} \ll_{\widehat{R}} P_y$. Then, applying the same arguments as above, it follows that $P_u \ll_{\widehat{R}} P_y$, and thus $P_y \ll_R P_u$. That is, $y \in D_1$. Summarizing, both sets D_1 and $D_2 \subseteq S_2$ are not empty.

> **The vertex x_1.** Among the vertices of $D_1 \cup D_2$ let x_1 be such a vertex, that for every other vertex $x' \in D_1 \cup D_2 \setminus \{x_1\}$, either $T_{x'}$ intersects T_{x_1} in the trapezoid representation R_T, or $T_{x_1} \ll_{R_T} T_{x'}$. That is, there exists no vertex x' in $D_1 \cup D_2$, whose trapezoid lies to the left of T_{x_1} in R_T. By possibly building the reverse project representation $\widehat{R}$ of R, we may assume w.l.o.g. that $P_{x_1} \ll_R P_u$, i.e. $x_1 \in D_1$.

As already mentioned above, since u does not have the right border property in R, there exist vertices $w \in N(u)$ and $x \in D_2 \subseteq V_0(u)$, such that $P_w \ll_R P_x$.

> **The vertex x_2.** Among the vertices $x \in D_2$, for which $P_w \ll_R P_x$, let x_2 be such a vertex, that for every other vertex $x' \in D_2 \setminus \{x_2\}$ with $P_w \ll_R P_{x'}$, either $T_{x'}$ intersects T_{x_2} in the trapezoid representation R_T, or $T_{x_2} \ll_{R_T} T_{x'}$. That is, there exists no vertex x' in D_2 with $P_w \ll_R P_{x'}$, whose trapezoid $T_{x'}$ lies to the left of T_{x_2} in R_T.

Furthermore, $x_1x_2 \notin E$, since $x_1 \in D_1$ and $x_2 \in D_2$, i.e. $P_{x_1} \ll_R P_u \ll_R P_{x_2}$. Therefore, since $T_x \ll_{R_T} T_u$ for every $x \in V_0(u)$, it follows by the definition of x_1 that $T_{x_1} \ll_{R_T} T_{x_2} \ll_{R_T} T_u$. Thus, since $wu \in E$ and $wx_2 \notin E$, it follows that also $T_{x_1} \ll_{R_T} T_{x_2} \ll_{R_T} T_w$, i.e. $wx_1 \notin E$. That is, x_1, x_2, and w are three independent vertices in G.

> **The vertex set $\widetilde{X}_1$.** We construct iteratively the vertex set $\widetilde{X}_1 \subseteq D_1$ from the vertex x_1, as follows. Initially, we set $\widetilde{X}_1 = \{x_1\}$. If $N(w) \cap N(\widetilde{X}_1) \subset N(\widetilde{X}_1)$, then set $\widetilde{X}_1$ to be equal to $\widetilde{X}_1 \cup N(\widetilde{X}_1) \setminus N(w)$. Iterate, until finally $N(w) \cap N(\widetilde{X}_1) = N(\widetilde{X}_1)$.

This process of computing the set $\widetilde{X}_1$ terminates, since every time we strictly augment the current set $\widetilde{X}_1$. Furthermore, at the end of this procedure, $N(\widetilde{X}_1) \neq \emptyset$, since otherwise G is not connected, which is a contradiction. Moreover, the vertices of $\widetilde{X}_1$ at every step of this procedure induce a connected subgraph of G.

An example is illustrated in Figure 5, where a projection representation R of a graph $G \in$ (Tolerance $\cap$ Trapezoid) is given in Figure 5(a) and a trapezoid representation R_T of the same graph G is given in Figure 5(b). In Figure 5(a) the vertex u is the only unbounded vertex, and thus $Q_u = \emptyset$. Furthermore w is the only neighbor of u, i.e. $N(u) = \{w\}$. The *covering* vertices of u are the vertices $\{u^*, z_1, z_2, z_3\}$ and $V_0(u) = \{x_1, x_2, v_1, v_2, v_3, v_4, v_5, z_1, z_2, z_3, u^*\}$. The vertices $x_1, x_2 \in V_0(u)$ are illustrated in Figure 5(a) (resp. in Figure 5(b)) by dark colored parallelograms (resp. by dark colored trapezoids). The sets D_1, D_2, S_2 are as follows (cf. Figure 5(a)): $D_1 = \{x_1, v_1, v_2, v_3, v_4\}$, $D_2 = \{x_2, v_5\}$, $S_2 = D_2 \cup \{z_1, z_2, z_3, u^*\} = \{x_2, v_5, z_1, z_2, z_3, u^*\}$. Moreover $N(w) = \{u^*, z_1, z_2, z_3\}$ and $N(x_2) = \{z_1, z_2, z_3\}$. Finally $\widetilde{X}_1 = \{x_1, v_1, v_2\}$ and $N[\widetilde{X}_1] = \widetilde{X}_1 \cup \{z_1\}$.

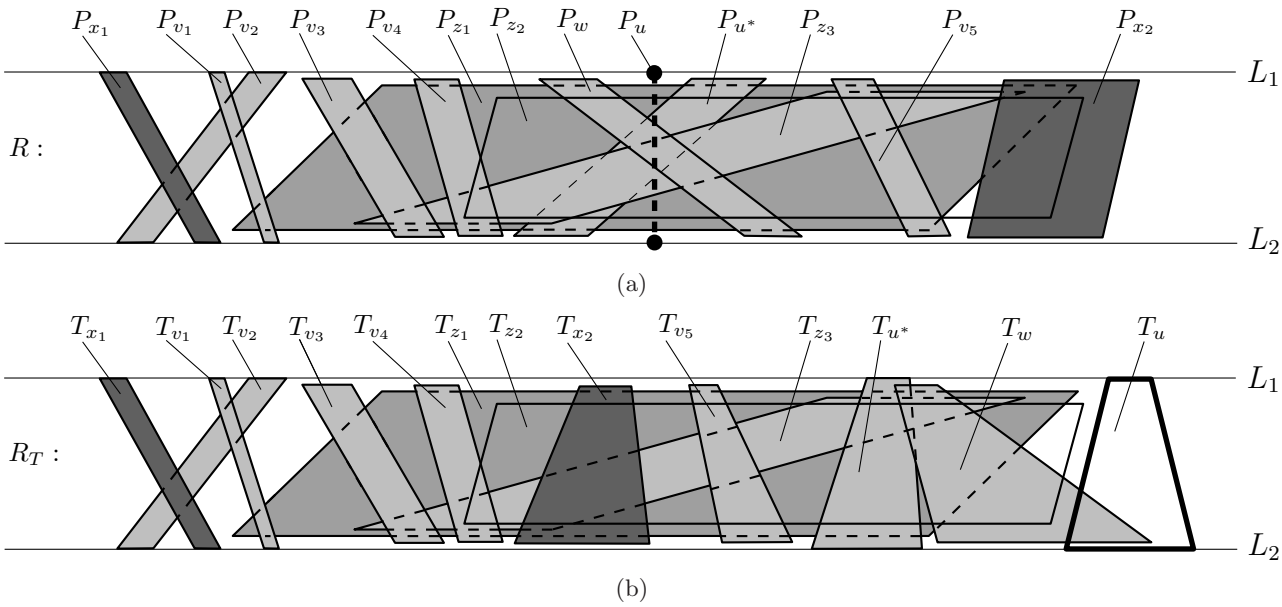

Figure 5: (a) A projection representation R of a graph $G \in$ (Tolerance $\cap$ Trapezoid) and (b) a trapezoid representation R_T of the same graph G.

Lemma 15 *For the constructed set $\widetilde{X}_1$, $\widetilde{X}_1 \subseteq D_1$. Furthermore, $P_x \ll_R P_w$ and $T_x \ll_{R_T} T_{x_2}$ for every $x \in \widetilde{X}_1$.*

Proof. The proof of the lemma is done by induction on $|\widetilde{X}_1|$. Suppose first that $|\widetilde{X}_1| = 1$, i.e. $\widetilde{X}_1 = \{x_1\}$. Then, $\{x_1\} \subseteq D_1$ and $T_{x_1} \ll_{R_T} T_{x_2}$ by definition of x_1. We will now prove that also $P_{x_1} \ll_R P_w$. Otherwise, suppose first that $P_w \ll_R P_{x_1}$. Then, since $x_1 \in D_1$, it follows that $P_w \ll_R P_{x_1} \ll_R P_u$, and thus $w \notin N(u)$, which is a contradiction. Thus, either P_{x_1} intersects P_w in R, or $P_{x_1} \ll_R P_w$. Suppose that P_{x_1} intersects P_w in R. Then, x_1 is unbounded and $\phi_{x_1} > \phi_w > \phi_u$, since w is bounded and $x_1 w \notin E$. Then, Lemma 3 implies that $N(x_1) \subseteq N(w)$. Furthermore, since $T_{x_1} \ll_{R_T} T_{x_2} \ll_{R_T} T_w$, it follows that T_z intersects T_{x_2} in R_T for every $z \in N(x_1) \subseteq N(w)$, and thus also $N(x_1) \subseteq N(x_2)$. Therefore, since $P_{x_1} \ll_R P_u \ll_R P_{x_2}$, it follows that for every $z \in N(x_1) \subseteq N(x_2)$, z is bounded in R, $\phi_u < \phi_{x_1} < \phi_z$, and P_z intersects P_u in R. Thus, $N(x_1) \subseteq N(u)$, i.e. $x_1 \in Q_u$, which is a contradiction by Lemma 14, since $x_1 \in V_0(u)$. It follows that P_{x_1} does not intersect P_w in R, and thus $P_{x_1} \ll_R P_w$. This proves the induction basis.

For the induction step, suppose that the statement of the lemma holds for the set $\widetilde{X}_1$ constructed after an iteration of the construction procedure, and let $v \in N(\widetilde{X}_1) \setminus N(w)$. Suppose first that $v \in N(u)$, and thus v is bounded in R. Then, since by the induction hypothesis $T_x \ll_{R_T} T_{x_2} \ll_{R_T} T_u$

for every $x \in \widetilde{X}_1$, and since $v \in N(x) \cap N(u)$ for some $x \in \widetilde{X}_1$, it follows that T_v intersects T_{x_2} in R_T, and thus $vx_2 \in E$. On the other hand, since $P_x \ll_R P_w \ll_R P_{x_2}$ for every $x \in \widetilde{X}_1$ by the induction hypothesis, and since $v \in N(x) \cap N(x_2)$ for some $x \in \widetilde{X}_1$, it follows that P_v intersects P_w in R, and thus $vw \in E$, since both v and w are bounded. This is a contradiction, since $v \in N(\widetilde{X}_1) \setminus N(w)$. Thus, $v \notin N(u)$ for every $v \in N(\widetilde{X}_1) \setminus N(w)$. Therefore, since $v \in N(\widetilde{X}_1)$ and $\widetilde{X}_1 \subseteq V_0(u)$, it follows that $v \in V_0(u)$ for every $v \in N(\widetilde{X}_1) \setminus N(w)$, and thus the updated set $\widetilde{X}_1$ is $\widetilde{X}_1 \cup N(\widetilde{X}_1) \setminus N(w) \subseteq V_0(u)$.

Since $v \in N(x)$ for some $x \in \widetilde{X}_1$, and since $P_x \ll_R P_w$ for every $x \in \widetilde{X}_1$ by the induction hypothesis, it follows that either P_v intersects P_w in R, or $P_v \ll_R P_w$. Suppose that P_v intersects P_w in R. Then, v is unbounded and $\phi_v > \phi_w$, since $v \notin N(w)$ and w is bounded. Therefore, $N(v) \subseteq N(w)$ by Lemma 3, and thus in particular $x \in N(w)$ for some $x \in \widetilde{X}_1$, which is a contradiction to the induction hypothesis. Therefore, P_v does not intersect P_w in R, and thus $P_v \ll_R P_w$ for every $v \in N(\widetilde{X}_1) \setminus N(w)$.

We will prove that also $P_v \ll_R P_u$ for every $v \in N(\widetilde{X}_1) \setminus N(w)$. Otherwise, suppose first that $P_u \ll_R P_v$. Then, since $P_v \ll_R P_w$ by the previous paragraph, it follows that $P_u \ll_R P_v \ll_R P_w$, and thus $w \notin N(u)$, which is a contradiction. Suppose now that P_v intersects P_u in R. Recall that $v \notin N(u)$, as we proved above. If $\phi_u > \phi_v$, then $N(u) \subseteq N(v)$ by Lemma 3, and thus also $w \in N(v)$, which is a contradiction, since $v \in N(\widetilde{X}_1) \setminus N(w)$. If $\phi_u < \phi_v$, then v is unbounded, since otherwise $v \in N(u)$, which is a contradiction. Furthermore, $N(v) \subseteq N(u)$ by Lemma 3, and thus $v \in Q_u$, which is a contradiction by Lemma 14, since $v \in V_0(u)$ as we proved above. Therefore, $P_v \ll_R P_u$, i.e. $v \in D_1$, for every $v \in N(\widetilde{X}_1) \setminus N(w)$, and thus the updated set $\widetilde{X}_1$ is $\widetilde{X}_1 \cup N(\widetilde{X}_1) \setminus N(w) \subseteq D_1$.

Since the updated set $\widetilde{X}_1 \cup N(\widetilde{X}_1) \setminus N(w)$ is a subset of D_1, i.e. $x \in V_0(u)$ and $P_x \ll_R P_u$ for every $x \in \widetilde{X}_1 \cup N(\widetilde{X}_1) \setminus N(w)$, it follows in particular that $xx_2 \notin E$ for every $x \in \widetilde{X}_1 \cup N(\widetilde{X}_1) \setminus N(w)$, since $P_u \ll_R P_{x_2}$. Recall furthermore that the set $\widetilde{X}_1 \cup N(\widetilde{X}_1) \setminus N(w)$ induces a connected subgraph of G. Thus, since $T_{x_1} \ll_{R_T} T_{x_2}$, it follows that $T_x \ll_{R_T} T_{x_2}$ for every $x \in \widetilde{X}_1 \cup N(\widetilde{X}_1) \setminus N(w)$. This completes the induction step, and the lemma follows. ■

Corollary 3 *For the constructed set $\widetilde{X}_1$, $N(\widetilde{X}_1) \setminus N(u) \neq \emptyset$.*

Proof. Suppose for the sake of contradiction that $N(\widetilde{X}_1) \setminus N(u) = \emptyset$, i.e. $N(\widetilde{X}_1) \subseteq N(u)$. Since $\widetilde{X}_1 \subseteq D_1 \subseteq V_0(u)$ by Lemma 15, it follows that $P_x \ll_R P_u$ for every $x \in \widetilde{X}_1$, and thus in particular $x \notin N(u)$ for every $x \in \widetilde{X}_1$. Therefore, since $\widetilde{X}_1$ induces a connected subgraph of G, it follows that $\widetilde{X}_1$ is a connected component of $G \setminus N[u]$. Therefore, since $V_0(u)$ is connected, it follows that $V_0(u) = \widetilde{X}_1$. This is a contradiction, since $\emptyset \neq D_2 \subseteq V_0(u)$. Therefore, $N(\widetilde{X}_1) \setminus N(u) \neq \emptyset$. ■

Recall by definition of x_2 that for every vertex $x' \in D_2 \setminus \{x_2\}$ with $P_w \ll_R P_{x'}$, either $T_{x'}$ intersects T_{x_2} in the trapezoid representation R_T, or $T_{x_2} \ll_{R_T} T_{x'}$. We will now prove in the following lemma that this property holds actually for all vertices $x' \in S_2 \setminus \{x_2\}$.

Lemma 16 *For every vertex $x' \in S_2 \setminus \{x_2\}$, either $T_{x'}$ intersects T_{x_2} in the trapezoid representation R_T, or $T_{x_2} \ll_{R_T} T_{x'}$.*

Proof. Consider an arbitrary vertex $x' \in S_2 \setminus \{x_2\}$. If $x' \in N(x_2)$, then clearly $T_{x'}$ intersects T_{x_2} in R_T. Thus, it suffices to consider in the following of the proof only the case where $x' \notin N(x_2)$, i.e. the case where $T_{x'}$ does not intersect T_{x_2} in R_T. Suppose for the sake of contradiction that $T_{x'} \ll_{R_T} T_{x_2}$, i.e. $T_{x'} \ll_{R_T} T_{x_2} \ll_{R_T} T_w$. Then, in particular, $x' \notin N(w)$. Furthermore, note that $x' \notin N(u)$, since $x' \in S_2 \subseteq V_0(u)$.

Suppose first that $x' \in S_2 \setminus D_2$, i.e. $P_{x'}$ intersects P_u in R. If $\phi_{x'} > \phi_u$, then x' is unbounded, since otherwise $x' \in N(u)$ which is a a contradiction. Furthermore, $N(x') \subseteq N(u)$ by Lemma 3, and thus $x' \in Q_u$, which is a contradiction by Lemma 14, since $x \in V_0(u)$. If $\phi_{x'} < \phi_u$, then $N(u) \subseteq N(x')$ by Lemma 3, and thus in particular $wx' \in E$, which is a contradiction, since $x' \notin N(w)$. Therefore, the lemma holds for every vertex $x' \in S_2 \setminus D_2$.

Suppose now that $x' \in D_2$, i.e. $P_u \ll_R P_{x'}$. If $P_w \ll_R P_{x'}$, then the lemma follows by definition of x_2. If $P_{x'} \ll_R P_w$, then $P_u \ll_R P_{x'} \ll_R P_w$, and thus $w \notin N(u)$, which is a contradiction. Suppose

that $P_{x'}$ intersects P_w in R. Then, x' is unbounded and $\phi_{x'} > \phi_w > \phi_u$, since w is bounded and $x' \notin N(w)$. Note that $P_x \ll_R P_u \ll_R P_{x'}$ for every $x \in \widetilde{X}_1$, since $x' \in D_2$ and $\widetilde{X}_1 \subseteq D_1$ by Lemma 15. Therefore, $x' \notin N(x)$ for every $x \in \widetilde{X}_1$, and thus in particular $x' \notin N(x_1)$, since $x_1 \in \widetilde{X}_1$. Therefore, $T_{x'}$ does not intersect T_{x_1} in R_T, and thus $T_{x_1} \ll_{R_T} T_{x'}$ by definition of x_1. Furthermore, since $\widetilde{X}_1$ induces a connected subgraph of G, and since $x' \notin N(x)$ for every $x \in \widetilde{X}_1$, it follows that $T_x \ll_{R_T} T_{x'}$ for every $x \in \widetilde{X}_1$. Recall now that $T_{x_2} \ll_{R_T} T_w$ and that we assumed that $T_{x'} \ll_{R_T} T_{x_2}$. That is, $T_x \ll_{R_T} T_{x'} \ll_{R_T} T_{x_2} \ll_{R_T} T_w$ for every $x \in \widetilde{X}_1$.

Recall that $N(\widetilde{X}_1) \subseteq N(w)$ by the construction of the set $\widetilde{X}_1$. Therefore, since $T_x \ll_{R_T} T_{x'} \ll_{R_T} T_w$ for every $x \in \widetilde{X}_1$, it follows that T_z intersects $T_{x'}$ in R_T for every $z \in N(\widetilde{X}_1) \subseteq N(w)$, and thus $N(\widetilde{X}_1) \subseteq N(x')$. On the other hand, since $P_x \ll_R P_u \ll_R P_{x'}$ for every $x \in \widetilde{X}_1$ in the projection representation R, it follows that P_z intersects P_u in R for every $z \in N(\widetilde{X}_1) \subseteq N(x')$. Furthermore, since x' is unbounded and $\phi_{x'} > \phi_u$ in R, it follows that z is bounded in R and $\phi_z > \phi_{x'} > \phi_u$ for every $z \in N(\widetilde{X}_1) \subseteq N(x')$. Therefore, $z \in N(u)$ for every $z \in N(\widetilde{X}_1)$, i.e. $N(\widetilde{X}_1) \subseteq N(u)$, which is a contradiction by Corollary 3. This completes the proof of the lemma. ■

4.2 The vertex sets C_u, C_2, X_1, and H

We define the vertex set C_u as follows:

- C_u is the connected component of $G \setminus Q_u \setminus N[\widetilde{X}_1, x_2]$, in which u belongs

Note that, in particular, w belongs to C_u, since $wu \in E$, $w \notin Q_u$, and $wx, wx_2 \notin E$ for every $x \in \widetilde{X}_1$, and thus $C_u \setminus \{u\} \neq \emptyset$. Recall that the trapezoids of all vertices of $V_0(u)$ lie to the left of the trapezoid of u in the trapezoid representation R_T; S_2 is exactly the subset of vertices of $V_0(u)$, whose parallelograms do not lie to the left of the parallelogram P_u of u in R.

Before we define the vertex set C_2, we first need to define the auxiliary vertex sets $\widetilde{\widetilde{C}}_2$ and $\widetilde{C}_2$ as follows:

- $\widetilde{\widetilde{C}}_2$ is the set of connected components of $G \setminus Q_u \setminus N[\widetilde{X}_1]$, in which the vertices of S_2 belong
- $\widetilde{C}_2 = \widetilde{\widetilde{C}}_2 \setminus N[u, w] \setminus C_u$

Since $x_2 \in S_2$, note that $V(C_u \cup \widetilde{\widetilde{C}}_2)$ induces the set of connected components of $G \setminus Q_u \setminus N[\widetilde{X}_1]$, in which the vertices of $S_2 \cup \{u\}$ belong. Furthermore we define the vertex set $\widetilde{H}$ as follows:

- $\widetilde{H}$ is the induced subgraph of $G \setminus Q_u \setminus N[\widetilde{X}_1]$ on the vertices of $N[u, w] \cap N(x_2)$

Note that $V(C_u \cup \widetilde{\widetilde{C}}_2) = V(C_u \cup \widetilde{C}_2 \cup \widetilde{H})$, i.e. $V(C_u \cup \widetilde{C}_2 \cup \widetilde{H})$ also induces the set of connected components of $G \setminus Q_u \setminus N[\widetilde{X}_1]$, in which the vertices of $S_2 \cup \{u\}$ belong.

In the example of Figure 5, note that $N[\widetilde{X}_1] = \{x_1, v_1, v_2, z_1\}$ and $N[\widetilde{X}_1, x_2] = \{x_1, x_2, v_1, v_2, z_1, z_2, z_3\}$. Thus $C_u = \{u, w, u^*\}$. Furthermore $\widetilde{\widetilde{C}}_2 = \{u, w, u^*, z_2, z_3, v_3, v_4, v_5, x_2\}$. Therefore, since $N[u, w] = \{u, w, u^*, z_1, z_2, z_3\}$, it follows by the definition of $\widetilde{C}_2$ that $\widetilde{C}_2 = \widetilde{\widetilde{C}}_2 \setminus N[u, w] \setminus C_u = \{v_3, v_4, v_5, x_2\}$. Moreover $N[u, w] \cap N(x_2) = \{z_1, z_2, z_3\}$, and thus $\widetilde{H} = \{z_2, z_3\}$.

Let v be a vertex of the set $\widetilde{C}_2$, and thus $v \notin N(u)$ by the definition of $\widetilde{C}_2$. Suppose that P_v intersects P_u in R. If $\phi_v > \phi_u$, then v is unbounded, since otherwise $v \in N(u)$, which is a contradiction. Furthermore, $N(v) \subseteq N(u)$ by Lemma 3, and thus $v \in Q_u$, which is a contradiction to the definition of $\widetilde{C}_2$. If $\phi_v < \phi_u$, then $N(u) \subseteq N(v)$ by Lemma 3, and thus $w \in N(v)$, which is again a contradiction to the definition of $\widetilde{C}_2$. Therefore, there is no vertex v of $\widetilde{C}_2$, such that P_v intersects P_u in R. That is, for every $v \in \widetilde{C}_2$ either $P_v \ll_R P_u$ or $P_u \ll_R P_v$.

The connected components of $\widetilde{C}_2$. Let now $A_1, A_2, \ldots, A_k, A_{k+1}, \ldots, A_\ell$ be the connected components of $\widetilde{C}_2$, such that $P_v \ll_R P_u$ for every $v \in A_i$, $i = 1, 2, \ldots, k$, and $P_u \ll_R P_v$ for every $v \in A_j$, $j = k+1, k+2, \ldots, \ell$.

The auxiliary sets $\mathcal{B}_1$ and $\mathcal{B}_2$ of connected components of $\widetilde{C}_2$. We partition the set $\{A_{k+1}, \ldots, A_\ell\}$ of components into two possibly empty subsets, namely $\mathcal{B}_1$ and $\mathcal{B}_2$, as follows. A component $A_j \in \mathcal{B}_2$, $j = k+1, k+2, \ldots, \ell$, if $A_j \cap S_2 \neq \emptyset$; otherwise, $A_j \in \mathcal{B}_1$.

Since any component $A_j \in \mathcal{B}_2$ is a connected subgraph of $G \setminus N[u]$, and since A_j has at least one vertex of $S_2 \subseteq V_0(u)$, it follows that $v \in V_0(u)$ for every $v \in A_j$, where $A_j \in \mathcal{B}_2$. Furthermore, $v \in D_2$ for every $v \in A_j \in \mathcal{B}_2$, since $P_u \ll_R P_v$ for every $v \in A_j$. Thus, $A_j \subseteq D_2$ for every component $A_j \in \mathcal{B}_2$, while $A_j \cap D_2 = \emptyset$ for every component $A_j \in \mathcal{B}_1$. That is, in particular the next observation follows.

Observation 3 *$V(\mathcal{B}_1) \subseteq V \setminus Q_u \setminus N[u] \setminus V_0(u)$, where $V(\mathcal{B}_1) = \bigcup_{A_j \in \mathcal{B}_1} A_j$.*

The auxiliary sets $\mathcal{A}_1$ and $\mathcal{A}_2$ of connected components of $\widetilde{C}_2$. We partition the set $\{A_1, A_2, \ldots, A_k\}$ of components into two possibly empty subsets, namely $\mathcal{A}_1$ and $\mathcal{A}_2$, as follows. A component $A_i \in \mathcal{A}_2$, $i = 1, 2, \ldots, k$, if $\widetilde{H} \subseteq N(x)$ for all vertices $x \in A_i$; otherwise, $A_i \in \mathcal{A}_1$.

That is, $\mathcal{A}_2$ includes exactly those components A_i, $i = 1, 2, \ldots, k$, for which all vertices of A_i are adjacent to all vertices of $\widetilde{H}$. We are now ready to give the definitions of the vertex sets X_1 and C_2 as follows:

- $X_1 = \widetilde{X}_1 \cup V(\mathcal{A}_1)$, where $V(\mathcal{A}_1) = \bigcup_{A_i \in \mathcal{A}_1} A_i$
- $C_2 = \mathcal{A}_2 \cup \mathcal{B}_2$

Furthermore, similarly to the definition of $\widetilde{H}$, we define the vertex set H as follows:

- H is the induced subgraph of $G \setminus Q_u \setminus N[X_1]$ on the vertices of $N[u, w] \cap N(x_2)$

Note that $H \subseteq \widetilde{H}$, since $\widetilde{X}_1 \subseteq X_1$, and thus for every component $A_i \in \mathcal{A}_2$, all vertices of A_i are also adjacent to all vertices of H. Furthermore, since $X_1 = \widetilde{X}_1 \cup V(\mathcal{A}_1)$, and since no vertex of $\mathcal{A}_1$ is adjacent to any vertex of $\widetilde{X}_1$, note that $N(X_1) = N(\widetilde{X}_1) \cup N(V(\mathcal{A}_1))$ and that $N[X_1] = N[\widetilde{X}_1] \cup N[V(\mathcal{A}_1)]$, i.e. in particular $N(\widetilde{X}_1) \subseteq N(X_1)$. Moreover, $N(X_1) \neq \emptyset$, since $N(\widetilde{X}_1) \neq \emptyset$.

In the example of Figure 5 recall that $\widetilde{C}_2 = \{v_3, v_4, v_5, x_2\}$, which has four connected components $\{v_3\}$, $\{v_4\}$, $\{v_5\}$, $\{x_2\}$. Furthermore recall that $S_2 = \{x_2, v_5, z_1, z_2, z_3, u^*\}$ and that $\widetilde{H} = \{z_2, z_3\}$. Thus the connected components of $\widetilde{C}_2$ are partitioned into the sets $\mathcal{A}_1, \mathcal{A}_2, \mathcal{B}_1, \mathcal{B}_2$ as follows: $\mathcal{A}_1 = \{\{v_3\}\}$, $\mathcal{A}_2 = \{\{v_4\}\}$, $\mathcal{B}_1 = \emptyset$, and $\mathcal{B}_2 = \{\{v_5\}, \{x_2\}\}$. Therefore $X_1 = \widetilde{X}_1 \cup \{v_3\} = \{x_1, v_1, v_2, v_3\}$ and $C_2 = \mathcal{A}_2 \cup \mathcal{B}_2 = \{v_4, v_5, x_2\}$.

Recall that $V(C_u \cup \widetilde{C}_2 \cup \widetilde{H})$ induces the set of connected components of $G \setminus Q_u \setminus N[\widetilde{X}_1]$, in which the vertices of $S_2 \cup \{u\}$ belong. The next lemma follows by the definitions of C_u, C_2, and H.

Lemma 17 *$V(C_u \cup C_2 \cup H)$ induces a subgraph of $G \setminus Q_u \setminus N[X_1] \setminus \mathcal{B}_1$ that includes all connected components of $G \setminus Q_u \setminus N[X_1] \setminus \mathcal{B}_1$, in which the vertices of $S_2 \cup \{u\}$ belong. Furthermore, $N(V(C_u \cup C_2 \cup H)) \subseteq Q_u \cup N(X_1) \cup V(\mathcal{B}_1)$.*

Proof. Consider a vertex $v \in N(V(\mathcal{A}_1))$. That is, $v \in N(v')$ and $v \notin V(\mathcal{A}_1)$, for some vertex $v' \in V(\mathcal{A}_1)$, i.e. $v' \in A_i$ for some $A_i \in \mathcal{A}_1$. First note that $v' \notin N(x_2)$, since $P_{v'} \ll_R P_u \ll_R P_{x_2}$ for every $v' \in A_i$ by definition of $\mathcal{A}_1$. If $v \in Q_u$, then $N(v) \subset N(u)$ by definition of Q_u, and thus $v' \in N(u)$, which is a contradiction due to the definition of $\widetilde{C}_2$, and since $v' \in V(\mathcal{A}_1) \subseteq \widetilde{C}_2$. Therefore $v \notin Q_u$. We will now prove that $v \in N(\widetilde{X}_1)$ or $v \in \widetilde{H}$. To this end, suppose that $v \notin N(\widetilde{X}_1)$. If $v \in \widetilde{C}_2$, then v is a vertex of the connected component A_i of $\widetilde{C}_2$, since $v \in N(v')$ and $v' \in A_i$. This is a contradiction, since $v \notin V(\mathcal{A}_1)$; thus $v \notin \widetilde{C}_2$. That is, $v' \in \widetilde{C}_2 \subseteq \widetilde{\widetilde{C}}_2$ and $v \notin \widetilde{C}_2$. Therefore, since $v \in N(v')$ and $v \notin Q_u \cup N(\widetilde{X}_1)$, it follows by definitions of $\widetilde{\widetilde{C}}_2$ and $\widetilde{C}_2$ that $v \in C_u$ or $v \in N[u, w]$. Let $v \in C_u$. Then,

since $v' \in N(v)$ and $v' \notin N(x_2)$, it follows that also $v' \in C_u$, which is a contradiction by definition of $\widetilde{C}_2$. Let $v \in N[u,w]$. If $v \notin N(x_2)$, then $v \in C_u$ and $v' \in C_u$, which is again a contradiction. If $v \in N(x_2)$, then $v \in \widetilde{H}$ by definition of $\widetilde{H}$. Summarizing, if $v \notin N(\widetilde{X}_1)$, then $v \in \widetilde{H}$. That is, for an arbitrary vertex $v \in N(V(\mathcal{A}_1))$, either $v \in N(\widetilde{X}_1)$ or $v \in \widetilde{H}$, i.e. $N(V(\mathcal{A}_1)) \subseteq N(\widetilde{X}_1) \cup \widetilde{H}$.

Note by definition of C_u and of $\widetilde{C}_2$ that $V(C_u) \cap V(\widetilde{H}) = \emptyset$ and that $V(\widetilde{C}_2) \cap V(\widetilde{H}) = \emptyset$. Therefore, it follows by the previous paragraph that $V(C_u) \cap N(V(\mathcal{A}_1)) \subseteq V(C_u) \cap (N(\widetilde{X}_1) \cup \widetilde{H}) = \emptyset$ and that $V(\widetilde{C}_2) \cap N(V(\mathcal{A}_1)) \subseteq V(\widetilde{C}_2) \cap (N(\widetilde{X}_1) \cup \widetilde{H}) = \emptyset$. Thus,

$$V(C_u) \setminus N(V(\mathcal{A}_1)) = V(C_u) \tag{1}$$
$$V(\widetilde{C}_2) \setminus N(V(\mathcal{A}_1)) = V(\widetilde{C}_2) \tag{2}$$

Recall now that $N(X_1) = N(\widetilde{X}_1) \cup N(V(\mathcal{A}_1))$. Therefore, it follows by definition of H that

$$\begin{aligned} V(\widetilde{H}) &= V(\widetilde{H} \setminus N(V(\mathcal{A}_1))) \cup V(\widetilde{H} \cap N(V(\mathcal{A}_1))) \\ &= V(H) \cup V(\widetilde{H} \cap N(V(\mathcal{A}_1))) \end{aligned} \tag{3}$$

Furthermore, recall that $V(\widetilde{C}_2) = V(C_2) \cup V(\mathcal{A}_1) \cup V(\mathcal{B}_1)$ by definition of C_2, and thus it follows by (3) that

$$\begin{aligned} V(C_u \cup \widetilde{C}_2 \cup \widetilde{H}) &= V(C_u) \cup V(C_2) \cup V(\mathcal{A}_1) \cup V(\mathcal{B}_1) \\ &\quad \cup V(H) \cup V(\widetilde{H} \cap N(V(\mathcal{A}_1))) \end{aligned} \tag{4}$$

Therefore, it follows by (1), (2), and (4) that

$$V(C_u \cup \widetilde{C}_2 \cup \widetilde{H}) \setminus N[V(\mathcal{A}_1)] \setminus V(\mathcal{B}_1) = V(C_u) \cup V(C_2) \cup V(H) \tag{5}$$

Thus, since $N[X_1] = N[\widetilde{X}_1] \cup N[V(\mathcal{A}_1)]$, it follows that also

$$V(C_u \cup \widetilde{C}_2 \cup \widetilde{H}) \setminus N[X_1] \setminus V(\mathcal{B}_1) = V(C_u \cup C_2 \cup H) \tag{6}$$

Therefore, since $V(C_u \cup \widetilde{C}_2 \cup \widetilde{H})$ induces the set of connected components of $G \setminus Q_u \setminus N[\widetilde{X}_1]$, in which the vertices of $S_2 \cup \{u\}$ belong, it follows in particular by (6) that $V(C_u \cup C_2 \cup H)$ induces a subgraph of $G \setminus Q_u \setminus N[X_1] \setminus \mathcal{B}_1$; moreover, this subgraph includes all connected components of $G \setminus Q_u \setminus N[X_1] \setminus \mathcal{B}_1$, in which the vertices of $S_2 \cup \{u\}$ belong. On the other hand, since $V(C_u \cup \widetilde{C}_2 \cup \widetilde{H})$ induces a set of connected components of $G \setminus Q_u \setminus N[\widetilde{X}_1]$, it follows that $N(V(C_u \cup \widetilde{C}_2 \cup \widetilde{H})) \subseteq Q_u \cup N(\widetilde{X}_1)$. Therefore, it follows by (6) that $N(V(C_u \cup C_2 \cup H)) \subseteq Q_u \cup N(X_1) \cup V(\mathcal{B}_1)$. This completes the proof of the lemma. ■

For the remainder of the proof, for every vertex $v \in V \setminus X_1$ we denote for simplicity:

- $N_1(v) = N(v) \cap N(X_1)$

Moreover, C_u is also the connected component of $G \setminus Q_u \setminus N[X_1, x_2]$ (and not only of $G \setminus Q_u \setminus N[\widetilde{X}_1, x_2]$), in which u belongs, as we prove in the next lemma. The next two lemmas extend Lemma 15.

Lemma 18 *For the constructed sets X_1 and C_2, $N_1(w) = N(X_1)$, $X_1 \subseteq D_1$, and $C_2 \subseteq V_0(u)$. Furthermore, C_u is the connected component of $G \setminus Q_u \setminus N[X_1, x_2]$, in which u belongs.*

Proof. Recall first that $N(\widetilde{X}_1) \subseteq N(w)$ by the construction of the set $\widetilde{X}_1$. Consider an arbitrary component $A_i \in \mathcal{A}_1 \cup \mathcal{A}_2 = \{A_1, A_2, \ldots, A_k\}$. Recall that $v \notin N(x_2)$ for every $v \in A_i$, since $P_v \ll_R P_u \ll_R P_{x_2}$. We will prove now that $N(A_i) \setminus N[\widetilde{X}_1] \subseteq N(x_2)$. Suppose otherwise that there exists a vertex $v \in A_i$ and a vertex $v' \in N(v) \setminus N[\widetilde{X}_1]$, such that $v' \notin A_i$ and $v' \notin N(x_2)$.

By definition of $\widetilde{C}_2$ it follows that either $v' \in Q_u$, or $v' \in N[u,w]$, or $v' \in C_u$. Suppose that $v' \in Q_u$. Then, $N(v') \subset N(u)$, and thus $v \in N(u)$, since $vv' \in E$. This is a contradiction, since $P_v \ll_R P_u$ for every $v \in A_i$, where $A_i \in \mathcal{A}_1 \cup \mathcal{A}_2$. Therefore, either $v' \in N[u,w]$ or $v' \in C_u$. Then, since $u, w \in C_u$ and $v' \notin N(x_2)$, it follows by the definition of C_u that always $v' \in C_u$. Thus, $v \in C_u$, since $v \in N(v')$ and $v \notin N(x_2)$, which is a contradiction to definition of $\widetilde{C}_2$. Therefore, $N(A_i) \setminus N[\widetilde{X}_1] \subseteq N(x_2)$ for every $A_i \in \mathcal{A}_1 \cup \mathcal{A}_2$. Therefore, in particular $N(V(\mathcal{A}_1)) \setminus N[\widetilde{X}_1] \subseteq N(x_2)$, and thus $(N(V(\mathcal{A}_1)) \setminus N[\widetilde{X}_1]) \cap N(x_2) = N(V(\mathcal{A}_1)) \setminus N[\widetilde{X}_1]$.

Recall that if a vertex $v \in N[\widetilde{X}_1]$, then $v \notin C_u$ by definition of C_u. Moreover, as we have proved in the previous paragraph, if a vertex $v \in N(V(\mathcal{A}_1)) \setminus N[\widetilde{X}_1]$, then $v \in N(x_2)$, and thus again $v \notin C_u$ by definition of C_u. Therefore, since $X_1 = \widetilde{X}_1 \cup V(\mathcal{A}_1)$, it follows that if a vertex $v \in N[X_1]$, then $v \notin C_u$. That is, C_u is the connected component of $G \setminus Q_u \setminus N[X_1, x_2]$, in which u belongs.

Let $A_i \in \mathcal{A}_1$. Note that no vertex $v \in A_i$ is adjacent to any vertex of $\widetilde{X}_1$. Indeed, otherwise $v \in N(w)$ by definition of $\widetilde{X}_1$, which is a contradiction to the definition of $\widetilde{C}_2$. Since $A_i \subseteq \widetilde{C}_2$ includes no vertex of C_u, it follows in particular that $v \notin N(w)$ for every $v \in A_i$. Indeed, otherwise $v \in C_u$, since also $v \notin N(x_2)$, which is a contradiction. Consider now a vertex $z \in (N(A_i) \setminus N[\widetilde{X}_1]) \cap N(x_2)$, i.e. $z \in (N(v) \setminus N[\widetilde{X}_1]) \cap N(x_2)$ and $z \notin A_i$, for some $v \in A_i$. Suppose first that P_v intersects P_w in R. Then, v is unbounded and $\phi_v > \phi_w$, since w is bounded, and thus $N(v) \subseteq N(w)$ by Lemma 3. Therefore, in particular, $z \in N(w)$. Suppose now that P_v does not intersect P_w in R. Then, $P_v \ll_R P_u \ll_R P_{x_2}$ and $P_v \ll_R P_w \ll_R P_{x_2}$, since $wu \in E$. Thus, P_z intersects P_w and P_u in R, since $z \in N(v) \cap N(x_2)$. If z is unbounded, then $\phi_z > \phi_u$, since $\phi_u = \min\{\phi_x \mid x \in V_U\}$ in R by assumption. Therefore, $N(z) \subseteq N(u)$ by Lemma 3, and thus $x_2 \in N(u)$, which is a contradiction. Therefore, z is bounded, and thus $z \in N(w)$, since P_z intersects P_w in R and both z and w are bounded. Summarizing, $z \in N(w)$ for every $z \in (N(A_i) \setminus N[\widetilde{X}_1]) \cap N(x_2)$. That is, $(N(A_i) \setminus N[\widetilde{X}_1]) \cap N(x_2) \subseteq N(w)$ for every $A_i \in \mathcal{A}_1$, i.e. $(N(V(\mathcal{A}_1)) \setminus N[\widetilde{X}_1]) \cap N(x_2) \subseteq N(w)$. Therefore, since $X_1 = \widetilde{X}_1 \cup V(\mathcal{A}_1)$, and since no vertex of $\mathcal{A}_1$ is adjacent to any vertex of $\widetilde{X}_1$, it follows that

$$\begin{aligned} N(X_1) &= N(\widetilde{X}_1) \cup (N(V(\mathcal{A}_1)) \setminus N[\widetilde{X}_1]) \\ &= N(\widetilde{X}_1) \cup ((N(V(\mathcal{A}_1)) \setminus N[\widetilde{X}_1]) \cap N(x_2)) \subseteq N(w) \end{aligned} \tag{7}$$

since $(N(V(\mathcal{A}_1)) \setminus N[\widetilde{X}_1]) \cap N(x_2) = N(V(\mathcal{A}_1)) \setminus N[\widetilde{X}_1]$ and $N(\widetilde{X}_1) \subseteq N(w)$. That is, $N(X_1) \subseteq N(w)$, i.e. $N_1(w) = N(X_1)$.

Let now $A_i \in \mathcal{A}_1 \cup \mathcal{A}_2$, and let $v \in A_i$. Suppose first that $P_x \ll_R P_v$ for some $x \in \widetilde{X}_1$, i.e. $P_x \ll_R P_v \ll_R P_u \ll_R P_{x_2}$. Then, since $x, x_2 \in V_0(u)$, and since $V_0(u)$ is connected, there exists a vertex $z \in V_0(u)$, such that P_z intersects P_v in R. If $zv \in E$, then $v \in V_0(u)$, and thus $A_i \subseteq V_0(u)$. Let now $zv \notin E$. If $\phi_z > \phi_v$ then $N(z) \subseteq N(v)$ by Lemma 3. Then, since $z \in V_0(u)$, and since $V_0(u)$ is connected with at least two vertices, z has at least one neighbor $z' \in V_0(u)$, and thus $z' \in N(v)$. Then, $v \in V_0(u)$, and thus $A_i \subseteq V_0(u)$. On the other hand, if $\phi_v > \phi_z$, then $N(v) \subseteq N(z)$ by Lemma 3. Furthermore, v is unbounded, since otherwise $zv \in E$, which is a contradiction. If $N(v) \subseteq N(u)$, then $v \in Q_u$, which is a contradiction to the definition of $\widetilde{\widetilde{C}}_2$. Suppose now that $N(v) \nsubseteq N(u)$, i.e. v has at least one neighbor $v' \notin N(u)$. Then, $v' \in N(z)$, since $N(v) \subseteq N(z)$. Therefore, $v' \in V_0(u)$ and $v \in V_0(u)$, and thus $A_i \subseteq V_0(u)$. Summarizing, if $P_x \ll_R P_v$ for some $x \in \widetilde{X}_1$, then $A_i \subseteq V_0(u)$.

Suppose now that P_v intersects P_x in R, for some $x \in \widetilde{X}_1$. Recall that $\widetilde{X}_1 \subseteq V_0(u)$ by Lemma 15, and thus $x \in V_0(u)$. If $vx \in E$, then $v \in V_0(u)$, and thus $A_i \subseteq V_0(u)$. Let now $vx \notin E$. Then, it follows similarly to the previous paragraph that $A_i \subseteq V_0(u)$.

Suppose finally that $P_v \ll_R P_x$, i.e. $P_v \ll_R P_x \ll_R P_u \ll_R P_{x_2}$, for some $x \in \widetilde{X}_1$. Recall that $N(A_i) \setminus N[\widetilde{X}_1] \subseteq N(x_2)$, and thus for every vertex $v' \in N(v) \setminus N[\widetilde{X}_1]$, such that $v' \notin A_i$, it follows that $v' \in N(x_2)$. Consider such a vertex v'. Then, $P_{v'}$ intersects P_u and P_x in R, since $P_v \ll_R P_x \ll_R P_u \ll_R P_{x_2}$. Note that $v' \notin N(x)$, since otherwise $v' \in N(\widetilde{X}_1)$, which is a contradiction to the assumption that $v' \in N(v) \setminus N[\widetilde{X}_1]$. Suppose that $v' \in N(u)$, and thus v' is bounded in R and $\phi_{v'} > \phi_u$. Then, since $v' \notin N(x)$, it follows that x is unbounded and $\phi_x > \phi_{v'} > \phi_u$. Thus, $N(x) \subseteq N(v')$ by Lemma 3. If $\widetilde{X}_1 \neq \{x\}$, then x has at least one neighbor x' in $\widetilde{X}_1$ and

$x' \in N(v')$, since $N(x) \subseteq N(v')$. Thus, $v' \in N(\widetilde{X}_1)$, which is a contradiction to the assumption that $v' \in N(v) \setminus N[\widetilde{X}_1]$. Let $\widetilde{X}_1 = \{x\}$ and $z \in N(x)$. Then, $N(x) \subseteq N(w)$ by definition of $\widetilde{X}_1$, i.e. $z \in N(w)$. Thus, since $T_x \ll_{R_T} T_{x_2} \ll_{R_T} T_w$, it follows that T_z intersects T_{x_2} in R_T, i.e. $z \in N(x_2)$. Thus, P_z intersects P_u in R, since $P_x \ll_R P_u \ll_R P_{x_2}$ and $z \in N(x) \cap N(x_2)$. However, z is bounded and $\phi_z > \phi_x > \phi_u$, since x is unbounded. Thus, $zu \in E$, i.e. $z \in N(u)$. Since this holds for an arbitrary $z \in N(x)$, it follows that $N(x) \subseteq N(u)$, and thus $x \in Q_u$, which is a contradiction by Lemma 14, since $\widetilde{X}_1 = \{x\} \subseteq V_0(u)$. Thus, $v' \notin N(u)$ for every vertex $v' \in N(v) \setminus N[\widetilde{X}_1]$, such that $v' \notin A_i$. Therefore, since $v' \in N(x_2)$ for all such vertices v', and since $x_2 \in V_0(u)$, it follows that $v', v \in V_0(u)$, and thus $A_i \subseteq V_0(u)$.

Summarizing, $A_i \subseteq V_0(u)$ in every case, and thus $A_i \subseteq D_1$ for every component $A_i \in \mathcal{A}_1 \cup \mathcal{A}_2$. Furthermore, recall that $\widetilde{X}_1 \subseteq D_1$ by Lemma 15. Thus, since also $A_i \subseteq D_1$ for every component $A_i \in \mathcal{A}_1$, it follows that $X_1 = \widetilde{X}_1 \cup V(\mathcal{A}_1) \subseteq D_1$.

Recall now that $A_j \subseteq D_2$ for every component $A_j \in \mathcal{B}_2$, where $k+1 \leq j \leq \ell$, and thus $A_j \subseteq V_0(u)$ for every $A_j \in \mathcal{B}_2$. Therefore, since also $A_i \subseteq V_0(u)$ for every $A_i \in \mathcal{A}_2$, and since $C_2 = \mathcal{A}_2 \cup \mathcal{B}_2$, it follows that $C_2 \subseteq V_0(u)$. This completes the proof of the lemma. ■

Lemma 19 *For every $x \in X_1$, $T_x \ll_{R_T} T_{x_2}$ and $P_x \ll_R P_w$.*

Proof. Consider a component $A_i \in \mathcal{A}_1$. Recall that $v \notin N(x_2)$ for every $v \in A_i$, since $P_v \ll_R P_u \ll_R P_{x_2}$. Thus, since A_i is connected, either $T_{x_2} \ll_{R_T} T_v$ or $T_v \ll_{R_T} T_{x_2}$ for every vertex $v \in A_i$. Suppose that $T_{x_2} \ll_{R_T} T_v$ for every $v \in A_i$; let $v \in A_i$ be such a vertex. Since $v \in X_1 \subseteq V_0(u)$ by Lemma 18, it follows that $T_v \ll_{R_T} T_u$. Recall that $v \notin N(u) \cup N(w)$ by definition of $\widetilde{C}_2$. Therefore, since $w \in N(u)$, it follows that also $T_v \ll_{R_T} T_w$. Consider now a vertex $z \in \widetilde{H} = N[u,w] \cap N(x_2) \setminus Q_u \setminus N[\widetilde{X}_1]$. Then, since $T_{x_2} \ll_{R_T} T_v \ll_{R_T} T_u$ and $T_{x_2} \ll_{R_T} T_v \ll_{R_T} T_w$, it follows that T_z intersects T_v in R_T, and thus $vz \in E$. Since this holds for every vertex $v \in A_i$ and every vertex $z \in \widetilde{H}$, it follows that $A_i \in \mathcal{A}_2$, which is a contradiction. Thus, $T_v \ll_{R_T} T_{x_2}$ for every vertex $v \in A_i$, where $A_i \in \mathcal{A}_1$. Therefore, since also $T_x \ll_{R_T} T_{x_2}$ for every vertex $x \in \widetilde{X}_1$ by Lemma 15, it follows that $T_x \ll_{R_T} T_{x_2}$ for every vertex $x \in X_1$.

We will prove now that $P_v \ll_R P_w$ for every $v \in A_i$, where $A_i \in \mathcal{A}_1$. Otherwise, suppose first that $P_w \ll_R P_v$ for some $v \in A_i$. Then, since $P_v \ll_R P_u$ for every $v \in A_i$, it follows that $P_w \ll_R P_v \ll_R P_u$, and thus $w \notin N(u)$, which is a contradiction. Suppose now that P_v intersects P_w in R, for some $v \in A_i$. Then, since $v \notin N(w)$ by definition of $\widetilde{C}_2$, and since w is bounded, it follows that v is unbounded and $\phi_v > \phi_w > \phi_u$. Thus, $N(v) \subseteq N(w)$ by Lemma 3. Let now $z \in N(v) \subseteq N(w)$. Then, since $T_v \ll_{R_T} T_{x_2} \ll_{R_T} T_w$ (cf. the previous paragraph), it follows that T_z intersects T_{x_2} in R_T, i.e. $z \in N(x_2)$. Since this holds for an arbitrary $z \in N(v)$, it follows that also $N(v) \subseteq N(x_2)$. Therefore, since $P_v \ll_R P_u \ll_R P_{x_2}$, it follows that P_z intersects P_u in R for every $z \in N(v) \subseteq N(x_2)$. Furthermore, since v is unbounded, it follows that z is bounded and $\phi_z > \phi_v > \phi_u$ for every $z \in N(v)$, and thus $N(v) \subseteq N(u)$. That is, $v \in Q_u$, which is a contradiction by Lemma 14, since $v \in A_i \subseteq X_1 \subseteq V_0(u)$. It follows that $P_v \ll_R P_w$ for every $v \in A_i$, where $A_i \in \mathcal{A}_1$. Therefore, since also $P_x \ll_R P_w$ for every vertex $x \in \widetilde{X}_1$ by Lemma 15, it follows that $P_x \ll_R P_w$ for every vertex $x \in X_1$. This completes the lemma. ■

Lemma 20 *Denote $N = N(X_1) = N_1(w)$. Then, $N_1(u) \subset N$ and $N_1(x_2) = N_1(v) = N$ for every bounded vertex $v \in C_u \setminus \{u\}$ in R.*

Proof. First note that $N_1(u) \subseteq N$, since $N = N(X_1)$ and $N_1(u) = N(u) \cap N(X_1)$ by definition. Recall that $N(\widetilde{X}_1) \subseteq N = N(X_1)$ and that $N(\widetilde{X}_1) \setminus N(u) \neq \emptyset$ by Corollary 3. Therefore also $N \setminus N(u) \neq \emptyset$, and thus $N_1(u) \subset N$.

Consider a vertex $z \in N$, i.e. $z \in N(x) \cap N(w)$ for some $x \in X_1$ by Lemma 18. Then, since $T_x \ll_{R_T} T_{x_2} \ll_{R_T} T_w$ by Lemma 19, it follows that T_z intersects T_{x_2} in R_T. Therefore, $z \in N(x_2)$, and thus $z \in N_1(x_2)$. Since this holds for every $z \in N$, it follows that $N \subseteq N_1(x_2)$. Thus, since by definition $N_1(x_2) \subseteq N$, it follows that $N_1(x_2) = N$.

Consider now a bounded vertex $v \in C_u$ in R and a vertex $z \in N$. Then, $z \in N(x) \cap N(x_2)$ for some $x \in X_1$, since $N_1(x_2) = N$ by the previous paragraph. Recall that C_u is connected and that no vertex of C_u is adjacent to x_2 by the definition of C_u. Thus, since $w \in C_u$ and $T_{x_2} \ll_{R_T} T_w$, it follows that T_{x_2} lies in R_T to the left of all trapezoids of the vertices of C_u; in particular, Lemma 19 implies that $T_x \ll_{R_T} T_{x_2} \ll_{R_T} T_v$ for every $x \in X_1$.

Suppose first that $P_x \ll_R P_v \ll_R P_{x_2}$. Then, P_z intersects P_v in R. Suppose that $z \notin N(v)$. Then, since v is bounded, it follows that z is unbounded and $\phi_z > \phi_v$, and thus $N(z) \subseteq N(v)$ by Lemma 3. Therefore, since $x \in N(z)$, it follows that $x \in N(v)$, i.e. $v \in N(X_1)$, which is a contradiction by Lemma 18. Thus, $z \in N(v)$.

Suppose now that P_v intersects P_x (resp. P_{x_2}) in R. Recall that, since $v \in C_u$, $v \notin N(x)$ by Lemma 18 (resp. $v \notin N(x_2)$ by definition of C_u). Thus, either $N(v) \subseteq N(x)$ or $N(x) \subseteq N(v)$ (resp. $N(v) \subseteq N(x_2)$ or $N(x_2) \subseteq N(v)$) by Lemma 3. If $N(v) \subseteq N(x)$ (resp. $N(v) \subseteq N(x_2)$), then v is an isolated vertex in $G \setminus Q_u \setminus N[X_1, x_2]$, and thus $v \notin C_u$, since $v \neq u$, which is a contradiction. If $N(x) \subseteq N(v)$ (resp. $N(x_2) \subseteq N(v)$), then $z \in N(v)$, since in particular $z \in N(x)$ (resp. $z \in N(x_2)$). Note here that this paragraph holds for both cases, where v is a bounded or an unbounded vertex in R.

Suppose that $P_{x_2} \ll_R P_v$. Then, $v \notin N(u)$ and $v \notin N(w)$, since $P_u \ll_R P_{x_2}$ and $P_w \ll_R P_{x_2}$. Furthermore, since C_u is connected, there must exist a vertex v' of C_u, such that $P_{v'}$ intersects P_{x_2} in R, and a path P from v' to v, where all intermediate vertices are $v'' \in C_u$, such that $P_{x_2} \ll_R P_{v''}$, i.e. $v'' \notin N(u)$ and $v'' \notin N(w)$. Recall that $v' \notin N(x_2)$ by definition of C_u, since $v' \in C_u$. Then, since $P_{v'}$ intersects P_{x_2} in R, it follows by the previous paragraph that $z \in N(v')$.

Let $v' \in N(u)$, and thus v' is bounded and $\phi_{v'} > \phi_u$. Then, x_2 is unbounded and $\phi_{x_2} > \phi_{v'} > \phi_u$, since v' is bounded and $v' \notin N(x_2)$. Consider now an arbitrary $z' \in N$. Recall that $z' \in N(x') \cap N(x_2)$ for some $x' \in X_1$, and thus $P_{z'}$ intersects P_u in R, since $P_{x'} \ll_R P_u \ll_R P_{x_2}$. Furthermore, z' is bounded and $\phi_z > \phi_{x_2} > \phi_u$, since x_2 is unbounded. Thus, $z' \in N(u)$. Since this holds for an arbitrary $z' \in N$, it follows that $N_1(u) = N$, which is a contradiction.

Let $v' \notin N(u)$. Since $v, v' \notin N(u)$, and since $v'' \notin N(u)$ for all intermediate vertices v'' of the path P, it follows that either $T_u \ll_{R_T} T_{v'}$ and $T_u \ll_{R_T} T_v$, or $T_{v'} \ll_{R_T} T_u$ and $T_v \ll_{R_T} T_u$. Recall that $z \in N(v')$. Therefore, if $T_u \ll_{R_T} T_{v'}$, then T_z intersects T_u in R_T, i.e. $z \in N(u)$, since in this case $T_{x_2} \ll_{R_T} T_u \ll_{R_T} T_{v'}$ and $z \in N(v') \cap N(x_2)$. Since this holds for an arbitrary $z \in N$, it follows that $N_1(u) = N$, which is a contradiction. Thus, $T_{v'} \ll_{R_T} T_u$ and $T_v \ll_{R_T} T_u$. Since $v \notin N(w)$, T_w does not intersect T_v in R_T, i.e. either $T_w \ll_{R_T} T_v$ or $T_v \ll_{R_T} T_w$. If $T_w \ll_{R_T} T_v$, then $T_w \ll_{R_T} T_v \ll_{R_T} T_u$, and thus $w \notin N(u)$, which is a contradiction. Therefore, $T_v \ll_{R_T} T_w$, i.e. $T_{x_2} \ll_{R_T} T_v \ll_{R_T} T_w$. Thus, T_z intersects T_v in R_T, i.e. $z \in N(v)$, since $z \in N(x_2) \cap N(w)$.

Suppose finally that $P_v \ll_R P_x$. Then, $v \notin N(u)$ and $v \notin N(w)$, since $P_x \ll_R P_u$ and $P_x \ll_R P_w$. Furthermore, since C_u is connected, there must exist a vertex v' of C_u, such that $P_{v'}$ intersects P_x in R, and a path P from v' to v, where all intermediate vertices are $v'' \in C_u$, such that $P_{v''} \ll_R P_{x_1}$, i.e. $v'' \notin N(u)$ and $v'' \notin N(w)$. Recall that $v' \notin N(x)$ by Lemma 18, since $v' \in C_u$. Then, since $P_{v'}$ intersects P_x in R, it follows (similarly to the above case where P_v intersects P_x in R) that $z \in N(v')$.

Let $v' \in N(u)$, and thus v' is bounded and $\phi_{v'} > \phi_u$. Then, x is unbounded and $\phi_x > \phi_{v'} > \phi_u$, since v' is bounded and $v' \notin N(x)$. Thus $N(x) \subseteq N(v')$ by Lemma 3. Since $x \in X_1$, either $x \in \widetilde{X}_1$ or $x \in A_i$ for some $A_i \in \mathcal{A}_1$. Let $x \in \widetilde{X}_1$ (resp. $x \in A_i$ for some $A_i \in \mathcal{A}_1$). If $\widetilde{X}_1 \neq \{x\}$ (resp. $A_i \neq \{x\}$), then x has at least one neighbor x' in $\widetilde{X}_1$ (resp. in A_i) and $x' \in N(v')$, since $N(x) \subseteq N(v')$. Thus, $v' \in N(X_1)$, which is a contradiction by Lemma 18, since $v' \in C_u$. If $\widetilde{X}_1 = \{x\}$ (resp. $A_i = \{x\}$), then $\{x\}$ is a connected component of X_1. Therefore, $z' \notin X_1$ for every neighbor $z' \in N(x)$, and thus $N(x) \subseteq N(x_2)$, since $N_1(x_2) = N(X_1)$, as we proved above. That is, $P_{z'}$ intersects P_u for every $z' \in N(x)$, since in this case $P_x \ll_R P_u \ll_R P_{x_2}$ and $z' \in N(x) \cap N(x_2)$. However, z' is bounded and $\phi_{z'} > \phi_x > \phi_u$, since x is unbounded. Thus, $z' \in N(u)$ for every $z' \in N(x)$. That is, $N(x) \subseteq N(u)$, and thus $x \in Q_u$, which is a contradiction by Lemma 14, since $x \in X_1 \subseteq V_0(u)$.

Let $v' \notin N(u)$. Since $v, v' \notin N(u)$, and since $v'' \notin N(u)$ for all intermediate vertices v'' of the path P, it follows that either $T_u \ll_{R_T} T_{v'}$ and $T_u \ll_{R_T} T_v$, or $T_{v'} \ll_{R_T} T_u$ and $T_v \ll_{R_T} T_u$. Recall that $z \in N(v')$. Therefore, if $T_u \ll_{R_T} T_{v'}$, then T_z intersects T_u in R_T, i.e. $z \in N(u)$, since in this case $T_x \ll_{R_T} T_u \ll_{R_T} T_{v'}$ and $z \in N(x) \cap N(v')$. Since this holds for an arbitrary $z \in N$, it follows that

$N_1(u) = N$, which is a contradiction. Thus, $T_{v'} \ll_{R_T} T_u$ and $T_v \ll_{R_T} T_u$. Since $v \notin N(w)$, T_w does not intersect T_v in R_T, i.e. either $T_w \ll_{R_T} T_v$ or $T_v \ll_{R_T} T_w$. If $T_w \ll_{R_T} T_v$, then $T_w \ll_{R_T} T_v \ll_{R_T} T_u$, and thus $w \notin N(u)$, which is a contradiction. Therefore, $T_v \ll_{R_T} T_w$, i.e. $T_x \ll_{R_T} T_v \ll_{R_T} T_w$. Thus, T_z intersects T_v in R_T, i.e. $z \in N(v)$, since $z \in N(x) \cap N(w)$.

Summarizing, $z \in N(v)$ for any $z \in N$ and any bounded vertex v of C_u in R, i.e. $N \subseteq N_1(v)$. Then, since $N_1(v) \subseteq N(X_1) = N$, it follows that $N_1(v) = N$ for every bounded vertex v of C_u in R. This completes the proof of the lemma. ■

The next two lemmas follow easily and will be used in the following.

Lemma 21 *Let $v \in V \setminus Q_u \setminus N[u] \setminus V_0(u)$. Then, either $P_{x_2} \ll_R P_v$ or $P_v \ll_R P_x$ for every $x \in X_1$.*

Proof. Let $v \in V \setminus Q_u \setminus N[u] \setminus V_0(u)$. Recall that $X_1 \subseteq V_0(u)$ by Lemma 18 and that $x_2 \in V_0(u)$ by definition of x_2. Suppose first that P_v intersects P_x, for some $x \in X_1$ (resp. P_v intersects P_{x_2}). If $v \in N(x)$ (resp. $v \in N(x_2)$), then $v \in V_0(u)$, since also $v \notin N(u)$, which is a contradiction. Therefore, $v \notin N(x)$ (resp. $v \notin N(x_2)$). If $\phi_x > \phi_v$ (resp. $\phi_{x_2} > \phi_v$), then $N(x) \subseteq N(v)$ (resp. $N(x_2) \subseteq N(v)$) by Lemma 3. Then, since x (resp. x_2) is not the only vertex of $V_0(u)$, and since $V_0(u)$ is connected, it follows that x (resp. x_2) is adjacent to another vertex $q \in V_0(u)$. Therefore $q \in N(v)$, since $N(x) \subseteq N(v)$ (resp. $N(x_2) \subseteq N(v)$), and thus also $v \in V_0(u)$, which is a contradiction. If $\phi_x < \phi_v$ (resp. $\phi_{x_2} < \phi_v$), then $N(v) \subseteq N(x)$ (resp. $N(v) \subseteq N(x_2)$) by Lemma 3. Then, in particular, v is unbounded, since otherwise $v \in N(x)$ (resp. $v \in N(x_2)$), which is a contradiction. Since $v \notin Q_u$ by the assumption on v, there exists at least one vertex $z \in N(v) \setminus N(u)$. Therefore, $z \in N(x)$ (resp. $z \in N(x_2)$), since $N(v) \subseteq N(x)$ (resp. $N(v) \subseteq N(x_2)$), and thus $z \in V_0(u)$ and $v \in V_0(u)$, which is a contradiction. Thus, P_v does not intersect P_{x_2} or P_x, for any $x \in X_1$.

Suppose now that $P_x \ll_R P_v \ll_R P_{x_2}$ for some $x \in X_1$. Then, since $x_2 \in V_0(u)$ and $x \in X_1 \subseteq V_0(u)$, and since $V_0(u)$ is connected, there exists a vertex $y \in V_0(u)$, such that P_y intersects P_v in R. Then $v \notin N(y)$, since otherwise $v \in V_0(u)$, which is a contradiction. If $\phi_y > \phi_v$, then $N(y) \subseteq N(v)$ by Lemma 3. Since $V_0(u)$ is connected with at least two vertices, there exists at least one neighbor $q \in V_0(u)$ of y. Then $q \in N(v)$, since $N(y) \subseteq N(v)$, and thus $v \in V_0(u)$, which is a contradiction. If $\phi_y < \phi_v$, then $N(v) \subseteq N(y)$ by Lemma 3. Then, in particular, v is unbounded, since otherwise $v \in N(y)$, which is a contradiction. Since $v \notin Q_u$ by the assumption on v, there exists at least one vertex $z \in N(v) \setminus N(u)$. Therefore, $z \in N(y)$, since $N(v) \subseteq N(y)$, and thus $z \in V_0(u)$ and $v \in V_0(u)$, which is again a contradiction.

Therefore, if $v \in V \setminus Q_u \setminus N[u] \setminus V_0(u)$, then either $P_{x_2} \ll_R P_v$ or $P_v \ll_R P_x$ for every $x \in X_1$. This completes the proof of the lemma. ■

Lemma 22 *For every $v \in V \setminus N[u] \setminus V_0(u)$, either $T_{x_2} \ll_{R_T} T_v$ or $T_v \ll_{R_T} T_x$ for every $x \in X_1$.*

Proof. Let $v \in V \setminus N[u] \setminus V_0(u)$. Recall first that $X_1 \subseteq V_0(u)$ by Lemma 18 and that $x_2 \in V_0(u)$ by definition of x_2. If T_v intersects T_{x_2} or T_x for some $x \in X_1$ in R_T, then $v \in V_0(u)$, since $v \notin N[u]$, which is a contradiction. Thus, T_v does not intersect T_{x_2} or T_x in R_T, for any $x \in X_1$. Suppose that $T_x \ll_{R_T} T_v \ll_{R_T} T_{x_2}$ for some $x \in X_1$. Then, since $V_0(u)$ is connected, it follows that T_z intersects T_v in R_T for at least one vertex $z \in V_0(u)$, and thus also $v \in V_0(u)$, which is again a contradiction. Thus, either $T_{x_2} \ll_{R_T} T_v$ or $T_v \ll_{R_T} T_x$ for every $x \in X_1$. ■

4.3 Some properties of the sets C_u and C_2

In the next three lemmas we prove some basic properties of the vertex sets C_u and C_u, which will be mainly used in the remainder of the proof of Theorem 2.

Lemma 23 *For every vertex $v \in C_u \setminus \{u\}$, $v \in V_0(u) \cup N(u)$.*

Proof. Consider a vertex $v \in C_u \setminus \{u\}$. Then, $v \notin Q_u$ by definition of C_u. Suppose that $v \notin V_0(u) \cup N(u)$, i.e. $v \in V \setminus Q_u \setminus N[u] \setminus V_0(u)$. Then, either $P_{x_2} \ll_R P_v$ or $P_v \ll_R P_x$ for every $x \in X_1$ by Lemma 21.

Suppose first that $P_{x_2} \ll_R P_v$. Then, since C_u is connected, and since $P_u \ll_R P_{x_2}$, there must exist a vertex v' of C_u, such that $P_{v'}$ intersects P_{x_2} in R, and a path P from v' to v, where all intermediate vertices are $v'' \in C_u$, such that $P_{x_2} \ll_R P_{v''}$. Therefore, since $P_u \ll_R P_{x_2} \ll_R P_{v''}$, it follows that $v'' \notin N(u)$ for all these intermediate vertices. Furthermore, $v' \notin N(x_2)$ by definition of C_u. If $\phi_{x_2} < \phi_{v'}$, then $N(v') \subseteq N(x_2)$ by Lemma 3. Therefore, v' is an isolated vertex of $G \setminus Q_u \setminus N[X_1, x_2]$, and thus $v' \notin C_u$, which is a contradiction. If $\phi_{x_2} > \phi_{v'}$, then $N(x_2) \subseteq N(v')$ by Lemma 3. Then, in particular, x_2 is unbounded, since otherwise $v' \in N(x_2)$, which is a contradiction. Thus, $\phi_{x_2} > \phi_u$, since $\phi_u = \min\{\phi_x \mid x \in V_U\}$. Furthermore, since $N_1(x_2) = N$ by Lemma 20, and since $P_x \ll_R P_u \ll_R P_{x_2}$ for every $x \in X_1$, it follows that P_z intersects P_u in R for every $z \in N$. Moreover, since x_2 is unbounded, and since $z \in N(x_2)$ for every $z \in N$, it follows that z is bounded and $\phi_z > \phi_{x_2} > \phi_u$ for every $z \in N$. Therefore, $N \subseteq N(u)$, i.e. $N_1(u) = N$, which is a contradiction by Lemma 20.

Suppose now that $P_v \ll_R P_x$ for every $x \in X_1$. Then, since C_u is connected, and since $P_x \ll_R P_u$ for every $x \in X_1$, there must exist a vertex v' of C_u, such that $P_{v'}$ intersects P_{x_0} in R for some $x_0 \in X_1$, and a path P from v' to v, where all intermediate vertices are $v'' \in C_u$, such that $P_{v''} \ll_R P_x$ for every $x \in X_1$. Therefore, since $P_{v''} \ll_R P_x \ll_R P_u$ for every $x \in X_1$, it follows that $v'' \notin N(u)$ for all these intermediate vertices. Furthermore, $v' \notin N(x_0)$ by Lemma 18, since $v' \in C_u$.

Let first $v' \notin N(u)$. If $\phi_{x_0} < \phi_{v'}$, then $N(v') \subseteq N(x_0)$ by Lemma 3. Therefore, v' is an isolated vertex of $G \setminus Q_u \setminus N[X_1, x_2]$, and thus $v' \notin C_u$, which is a contradiction. If $\phi_{x_0} > \phi_{v'}$, then $N(x_0) \subseteq N(v')$ by Lemma 3. Then, in particular, x_0 is unbounded, since otherwise $v' \in N(x_0)$, which is a contradiction. Since $x_0 \in X_1 \subseteq V_0(u)$, and since x_0 is not the only vertex of $V_0(u)$, it follows that x_0 has at least one neighbor $z \in V_0(u)$. Thus, $z \in N(v')$, since $N(x_0) \subseteq N(v')$. Therefore, since $v' \notin N(u)$, it follows that also $v' \in V_0(u)$. Thus, since $v \notin N(u)$ and $v'' \notin N(u)$ for all intermediate vertices v'' of the path P, it follows that $v \in V_0(u)$ and $v'' \in V_0(u)$ for all these vertices v''. This is a contradiction to the assumption that $v \notin V_0(u) \cup N(u)$.

Let now $v' \in N(u)$. Then, $P_{v'}$ intersects P_x for every $x \in X_1$, since $P_{v''} \ll_R P_x \ll_R P_u$ for every $x \in X_1$ and for every intermediate vertex v'' of the path P. If $\phi_x < \phi_{v'}$ for at least one $x \in X_1$, then $N(v') \subseteq N(x)$ by Lemma 3. Therefore, v' is an isolated vertex of $G \setminus Q_u \setminus N[X_1, x_2]$, and thus $v' \notin C_u$, which is a contradiction. Otherwise, if $\phi_x > \phi_{v'}$ for every $x \in X_1$, then $N(x) \subseteq N(v')$ for every $x \in X_1$ by Lemma 3. Then, in particular, every $x \in X_1$ is unbounded, since otherwise $v' \in N(x)$, which is a contradiction. Thus, $\phi_x > \phi_u$ for every $x \in X_1$, since $\phi_u = \min\{\phi_x \mid x \in V_U\}$. Furthermore, since $N_1(x_2) = N = N(X_1)$ by Lemma 20, and since $P_x \ll_R P_u \ll_R P_{x_2}$ for every $x \in X_1$, it follows that P_z intersects P_u in R for every $z \in N$. Moreover, since every $x \in X_1$ is unbounded, it follows that for every $z \in N$, z is bounded and $\phi_z > \phi_x > \phi_u$ for at least one $x \in X_1$. Therefore, $N \subseteq N(u)$, i.e. $N_1(u) = N$, which is a contradiction by Lemma 20. Summarizing, $v \in V_0(u) \cup N(u)$ for every $v \in C_u \setminus \{u\}$. ■

Lemma 24 *For every vertex $v \in C_u \setminus \{u\}$, $N_1(v) = N$.*

Proof. If v is a bounded vertex in R, then the lemma follows by Lemma 20. Suppose now that v is unbounded. Then, since $v \notin Q_u$ by definition of C_u, it follows that there exists at least one vertex $y_v \in N(v) \setminus N(u)$. Furthermore, there exists at least one vertex $y_u \in N(u) \setminus N(v)$. Indeed, otherwise $N(u) \subseteq N(v)$, and thus $N(u) \subset N(v)$ by Lemma 7, i.e. u is not unbounded maximal, which is a contradiction. Then, both y_u and y_v are bounded vertices in R, since u and v are unbounded. Furthermore, since $uv \notin E$, either $T_u \ll_{R_T} T_v$ or $T_v \ll_{R_T} T_u$.

Let first $T_u \ll_{R_T} T_v$. Since $y_v \notin N(u)$, T_{y_v} does not intersect T_u in R_T, i.e. either $T_{y_v} \ll_{R_T} T_u$ or $T_u \ll_{R_T} T_{y_v}$. If $T_{y_v} \ll_{R_T} T_u$, then $T_{y_v} \ll_{R_T} T_u \ll_{R_T} T_v$, and thus $y_v \notin N(v)$, which is a contradiction. Therefore, $T_u \ll_{R_T} T_{y_v}$. Moreover, $T_x \ll_{R_T} T_{x_2} \ll_{R_T} T_u \ll_{R_T} T_{y_v}$ for every $x \in X_1$ by Lemma 19, and thus in particular $y_v \notin N(X_1)$ and $y_v \notin N(x_2)$. Suppose that $N_1(y_v) \neq N$. Then, $y_v \notin C_u$ by Lemma 20, since y_v is bounded. Thus, since $v \in C_u$, $y_v \in N(v)$, and $y_v \notin Q_u$, it follows by Lemma 18 that either $y_v \in N(X_1)$ or $y_v \in N(x_2)$, which is a contradiction. Therefore, $N_1(y_v) = N$. Thus, for every $z \in N$, T_z intersects T_u in R_T, i.e. $z \in N(u)$, since $T_{x_2} \ll_{R_T} T_u \ll_{R_T} T_{y_v}$ and $z \in N(x_2) \cap N(y_v)$. Therefore, $N_1(u) = N$, which is a contradiction by Lemma 20.

Let now $T_v \ll_{R_T} T_u$. Since $y_u \notin N(v)$, T_{y_u} does not intersect T_v in R_T, i.e. either $T_{y_u} \ll_{R_T} T_v$ or $T_v \ll_{R_T} T_{y_u}$. If $T_{y_u} \ll_{R_T} T_v$, then $T_{y_u} \ll_{R_T} T_v \ll_{R_T} T_u$, and thus $y_u \notin N(u)$, which is a contradiction. Therefore, $T_v \ll_{R_T} T_{y_u}$. Recall that C_u is connected and that no vertex of C_u is adjacent to x_2 by the definition of C_u. Thus, since $u \in C_u$ and $T_{x_2} \ll_{R_T} T_u$, it follows that T_{x_2} lies in R_T to the left of all trapezoids of the vertices of C_u; in particular, Lemma 19 implies that $T_x \ll_{R_T} T_{x_2} \ll_{R_T} T_v \ll_{R_T} T_{y_u}$ for every $x \in X_1$. Thus, in particular, $y_u \notin N(X_1)$ and $y_u \notin N(x_2)$. Suppose that $N_1(y_u) \neq N$. Then, $y_u \notin C_u$ by Lemma 20, since y_u is bounded. Thus, since $u \in C_u$, $y_u \in N(u)$, and $y_u \notin Q_u$, it follows by Lemma 18 that either $y_u \in N(X_1)$ or $y_u \in N(x_2)$, which is a contradiction. Thus, $N_1(y_u) = N$. Therefore, for every $z \in N$, T_z intersects T_v in R_T, i.e. $z \in N(v)$, since $T_{x_2} \ll_{R_T} T_v \ll_{R_T} T_{y_u}$ and $z \in N(x_2) \cap N(y_u)$. Thus, $N_1(v) = N$. This completes the proof of the lemma. ■

Lemma 25 *For every vertex $v \in C_2$, $N_1(v) = N$.*

Proof. Recall first that $N_1(w) = N$ by Lemma 18. Let $v \in C_2$ and $x \in X_1$. Recall that $v \notin N(w)$ by definition of $\widetilde{C}_2$, and that $v \notin N(x)$ by definition of $\widetilde{\widetilde{C}}_2$, and thus either $T_v \ll_{R_T} T_x$ or $T_x \ll_{R_T} T_v$. We will first prove that $T_x \ll_{R_T} T_v$. Recall that $X_1 = \widetilde{X}_1 \cup V(\mathcal{A}_1)$.

Consider first the case where $x \in \widetilde{X}_1$. Note that $T_{x_1} \ll_{R_T} T_v$ for every vertex v of C_2, due to the definition of x_1, and since $v \notin N(x_1)$ and $C_2 \subseteq D_1 \cup D_2 \setminus \{x_1\}$. Recall also that $\widetilde{X}_1$ induces a connected subgraph of G and that $v \notin N[\widetilde{X}_1]$ for every vertex v of C_2 by definition of C_2. Thus, in this case $T_x \ll_{R_T} T_v$ for every $x \in \widetilde{X}_1$.

Consider now the case where $x \in A_i$, for some $A_i \in \mathcal{A}_1$, where $1 \leq i \leq k$. Recall that $C_2 = \mathcal{A}_2 \cup \mathcal{B}_2$. Suppose first that $v \in A_j$ for some $A_j \in \mathcal{B}_2$, where $k+1 \leq j \leq \ell$. Then, $v \in D_2$, since $A_j \subseteq D_2$, as we proved above. If $T_v \ll_{R_T} T_x$, then $T_v \ll_{R_T} T_x \ll_{R_T} T_{x_2}$ by Lemma 19, which is a contradiction by Lemma 16, since $v \in D_2 \subseteq S_2$. Thus, $T_x \ll_{R_T} T_v$. Suppose now that $v \in A_p$, for some $A_p \in \mathcal{A}_2$, where $1 \leq p \leq k$. For the sake of contradiction, suppose that $T_v \ll_{R_T} T_x$, i.e. $T_v \ll_{R_T} T_x \ll_{R_T} T_{x_2}$. Thus, since $x \in A_i$ and $A_i \neq A_p$, it follows that $T_v \ll_{R_T} T_y \ll_{R_T} T_{x_2}$ for every $y \in A_i$. Recall by definition of $\mathcal{A}_2$ that v is adjacent to all vertices $v' \in \widetilde{H}$. Thus, since $v' \in N(v) \cap N(x_2)$ for every $v' \in \widetilde{H}$, it follows that $T_{v'}$ intersects T_y in R_T, i.e. $y \in N(v')$, for every $y \in A_i$ and every $v' \in \widetilde{H}$. This is a contradiction by the definition of $\mathcal{A}_1$, and thus again $T_x \ll_{R_T} T_v$.

Summarizing, $T_x \ll_{R_T} T_v$ for every $v \in C_2$ and every $x \in X_1$. Since $v \in V_0(u)$ for every $v \in C_2$ by Lemma 18, it follows that $T_v \ll_{R_T} T_u$. Since $v \notin N(w)$ by definition of C_2, T_v does not intersect T_w in R_T, i.e. either $T_w \ll_{R_T} T_v$ or $T_v \ll_{R_T} T_w$. If $T_w \ll_{R_T} T_v$, then $T_w \ll_{R_T} T_v \ll_{R_T} T_u$, and thus $w \notin N(u)$, which is a contradiction. Therefore $T_v \ll_{R_T} T_w$, and thus $T_x \ll_{R_T} T_v \ll_{R_T} T_w$ for every $x \in X_1$. Consider now a vertex $z \in N = N(X_1)$. Then, $z \in N(x) \cap N(w)$ for some $x \in X_1$, since $N_1(w) = N = N(X_1)$ by Lemma 18. Therefore, T_z intersects T_v in R_T, i.e. $z \in N(v)$, since $T_x \ll_{R_T} T_v \ll_{R_T} T_w$. Since this holds for every $z \in N$, it follows that $N_1(v) = N$. This completes the proof of the lemma. ■

4.4 The recursive definition of the vertex subsets H_i, $i \geq 1$, of H

In the following, we define a partition of the set H into the subsets $H_1, H_2, \ldots$.

Definition 8 *Denote $H_0 = N$. Then, $H_i = \{x \in H \setminus \bigcup_{j=1}^{i-1} H_j \mid H_{i-1} \nsubseteq N(x)\}$ for every $i \geq 1$.*

It is now easy to see by Definition 8 that either $H_i = \emptyset$ for every $i \in \mathbb{N}$, or there exists some $p \in \mathbb{N}$, such that $H_p \neq \emptyset$ and $H_i = \emptyset$ for every $i > p$. That is, either $\bigcup_{i=1}^{\infty} H_i = \emptyset$, or $\bigcup_{i=1}^{\infty} H_i = \bigcup_{i=1}^{p} H_i$, for some $p \in \mathbb{N}$. Furthermore, $\bigcup_{i=1}^{\infty} H_i \subseteq H$ by Definition 8.

Definition 9 *Let $v_i \in H_i$, for some $i \geq 1$. Then, a sequence $(v_0, v_1, \ldots, v_{i-1}, v_i)$ of vertices, such that $v_j \in H_j$, $j = 0, 1, \ldots, i-1$, and $v_{j-1}v_j \notin E$, $j = 1, 2, \ldots, i$, is an H_i-chain of v_i.*

It easy to see by Definition 8 that for every set $H_i \neq \emptyset$, $i \geq 1$, and for every vertex $v_i \in H_i$, there exists at least one H_i-chain of v_i. The next two lemmas will be used in the remainder of the proof of Theorem 2.

Lemma 26 *Let $v_1 \in H_1$ and (v_0, v_1) be an H_1-chain of v_1. Then, v_1 is a bounded vertex, $P_{v_0} \ll_R P_{v_1}$ and $T_{v_0} \ll_{R_T} T_{v_1}$.*

Proof. First, we will prove that v_1 is a bounded vertex in R. Suppose otherwise that v_1 is unbounded, and thus $v_1 \notin N(u)$. Suppose that P_{v_1} intersects P_u in R. Then, $\phi_{v_1} > \phi_u$, since $\phi_u = \min\{\phi_x \mid x \in V_U\}$, and thus $N(v_1) \subseteq N(u)$ by Lemma 3. Recall that $x_2 \in N(v_1)$, since $v_1 \in H_1 \subseteq H$, and thus also $x_2 \in N(u)$. Then, $x_2 \in N(u)$, which is a contradiction. Therefore, P_{v_1} does not intersect P_u in R. If $P_{v_1} \ll_R P_u$, then $P_{v_1} \ll_R P_u \ll_R P_{x_2}$, and thus $v_1 \notin N(x_2)$, which is a contradiction by definition of H. Therefore, $P_u \ll_R P_{v_1}$. Furthermore, x_2 is bounded and $\phi_{x_2} > \phi_{v_1}$, since v_1 is assumed to be unbounded and $v_1 \in N(x_2)$ by definition of H. Recall that $T_x \ll_{R_T} T_{x_2} \ll_{R_T} T_u$ for every $x \in X_1$ by Lemma 19. Thus, since $v_1 \in N(x_2)$, $v_1 \notin N(u)$, and $v_1 \notin N(x)$ for every $x \in X_1$, it follows that also $T_x \ll_{R_T} T_{v_1} \ll_{R_T} T_u$ for every $x \in X_1$. Moreover, $N(u) \nsubseteq N(v_1)$, since u is unbounded-maximal and by Lemma 7. Let $y \in N(u) \setminus N(v_1)$, and thus y is bounded. Then, $T_{v_1} \ll_{R_T} T_y$, since $T_{v_1} \ll_{R_T} T_u$, and since $y \in N(u)$ and $y \notin N(v_1)$. Therefore, $T_x \ll_{R_T} T_{v_1} \ll_{R_T} T_y$ for every $x \in X_1$, and thus, in particular $y \notin N(X_1)$.

Suppose that $N_1(y) \neq N$. Then, $y \notin C_u$ by Lemma 24. Thus, since $u \in C_u$, $y \in N(u)$, and $y \notin Q_u$, it follows by Lemma 18 that either $y \in N(X_1)$ or $y \in N(x_2)$. Therefore, $y \in N(x_2)$, since $y \notin N(X_1)$, as we have proved above. Let $z \in N \setminus N_1(y)$. Then, $z \in N(x) \cap N(x_2)$ for some $x \in X_1$. Thus, since $P_x \ll_R P_u \ll_R P_{x_2}$, it follows that P_z intersects P_u in R. Suppose that z is unbounded. Then, $\phi_z > \phi_u$, since $\phi_u = \min\{\phi_x \mid x \in V_U\}$, and thus $N(z) \subseteq N(u)$ by Lemma 3. Then, $x_2 \in N(u)$, which is a contradiction. Therefore, z is bounded, and thus P_y does not intersect P_z, since y is also bounded and $z \notin N(y)$. That is, either $P_y \ll_R P_z$ or $P_z \ll_R P_y$.

Suppose first that $P_y \ll_R P_z$. If $P_y \ll_R P_x$, then $P_y \ll_R P_x \ll_R P_u$, and thus $y \notin N(u)$, which is a contradiction. If $P_x \ll_R P_y$, then $P_x \ll_R P_y \ll_R P_z$, and thus $z \notin N(x)$, which is again a contradiction. Thus, P_y intersects P_x in R. Recall that $y \notin N(x)$, since $y \notin N(X_1)$. Thus, since y is bounded, it follows that x is unbounded and $\phi_x > \phi_y$. Then, $N(x) \subseteq N(y)$ by Lemma 3, and thus $z \in N(y)$, which is a contradiction.

Suppose now that $P_z \ll_R P_y$. Recall that $L(y) <_R L(u)$ by Lemma 1, since $y \in N(u)$, and thus $R(z) <_R L(y) <_R L(u) <_R L(x_2)$. Therefore, $r(u) <_R l(x_2) <_R r(z) <_R l(y)$, since $z \in N(x_2)$. That is, $L(y) <_R L(x_2)$ and $l(x_2) <_R l(y)$, and thus $\phi_y > \phi_{x_2} > \phi_{v_1}$ (since $\phi_{x_2} > \phi_{v_1}$, as we proved above). If P_y intersects P_{v_1} in R, then $y \in N(v_1)$, since y is bounded, which is a contradiction. Therefore, P_y does not intersect P_{v_1} in R, i.e. either $P_{v_1} \ll_R P_y$ or $P_y \ll_R P_{v_1}$. If $P_{v_1} \ll_R P_y$, then $P_u \ll_R P_{v_1} \ll_R P_y$, and thus $y \notin N(u)$, which is a contradiction. Therefore, $P_y \ll_R P_{v_1}$.

Summarizing, $P_z \ll_R P_y \ll_R P_{v_1}$, and thus $r(z) <_R r(y) <_R r(v_1)$. Recall that $v_1 \in N[u, w] = N(u) \cup N(w)$ by definition of H. Therefore, $v_1 \in N(w)$, since $v_1 \notin N(u)$, and thus $r(v_1) <_R r(w)$ by Lemma 1. Recall that $r(w) <_R l(x_2)$, since $P_w \ll_R P_{x_2}$. That is, $r(z) <_R r(y) <_R r(v_1) <_R r(w) <_R l(x_2)$, i.e. $r(z) <_R l(x_2)$. On the other hand, $R(z) <_R L(y)$, since $P_z \ll_R P_y$. Furthermore, $L(y) <_R L(u)$ by Lemma 1 and since $y \in N(u)$, and $L(u) <_R L(x_2)$, since $P_u \ll_R P_{x_2}$. That is, $R(z) <_R L(y) <_R L(u) <_R L(x_2)$, i.e. $R(z) <_R L(x_2)$. Therefore, since also $r(z) <_R l(x_2)$, it follows that $P_z \ll_R P_{x_2}$. This is a contradiction, since $z \in N = N_1(x_2)$ by Lemma 20. Therefore, $N_1(y) = N$.

Since $N_1(y) = N$, and since $T_x \ll_{R_T} T_{v_1} \ll_{R_T} T_y$ for every $x \in X_1$, it follows that T_z intersects T_{v_1} in R_T, i.e. $z \in N(v_1)$, for every $z \in N$. Thus $N_1(v_1) = N$, i.e. $N = H_0 \subseteq N(v_1)$, which is a contradiction by Definition 8, since $v_1 \in H_1$. Therefore, v_1 is a bounded vertex in R.

Recall now that $v_0 \in N(x_0) \cap N(x_2)$ for some $x_0 \in X_1$, since $v_0 \in N = N_1(x_2)$ by Lemma 20. Furthermore, $v_1 \notin N(x_0)$ by definition of H, since otherwise $v_1 \in N(X_1)$, which is a contradiction. Suppose that P_{v_1} intersects P_{x_0} in R. If $\phi_{v_1} > \phi_{x_0}$, then $v_1 \notin N(x_0)$, since v_1 is bounded, which is a contradiction. Thus, $\phi_{v_1} < \phi_{x_0}$. Then, $N(x_0) \subseteq N(v_1)$ by Lemma 3, and thus $v_0 \in N(v_1)$, which is a contradiction. Therefore, P_{v_1} does not intersect P_{x_0} in R. If $P_{v_1} \ll_R P_{x_0}$, then $P_{v_1} \ll_R P_{x_0} \ll_R P_u \ll_R P_{x_2}$, and thus $v_1 \notin N(x_2)$, which is a contradiction. Thus, $P_{x_0} \ll_R P_{v_1}$.

Furthermore, P_{v_0} intersects P_u in R, since $P_{x_0} \ll_R P_u \ll_R P_{x_2}$ and $v_0 \in N(x_0) \cap N(x_2)$. If v_0 is unbounded, then $\phi_{v_0} > \phi_u$, since $\phi_u = \min\{\phi_x \mid x \in V_U\}$, and thus $N(v_0) \subseteq N(u)$ by Lemma 3. Then, $x_2 \in N(u)$, which is a contradiction. Therefore, v_0 is bounded, and thus P_{v_0} does not intersect P_{v_1} in R, since v_1 is also bounded and $v_0 \notin N(v_1)$. That is, either $P_{v_1} \ll_R P_{v_0}$ or $P_{v_0} \ll_R P_{v_1}$.

If $P_{v_1} \ll_R P_{v_0}$, then $P_{x_0} \ll_R P_{v_1} \ll_R P_{v_0}$, and thus $v_0 \notin N(x_0)$, which is a contradiction. Thus, $P_{v_0} \ll_R P_{v_1}$.

Finally, recall that $T_x \ll_{R_T} T_{x_2}$ for every $x \in X_1$ by Lemma 19. Therefore, $T_x \ll_{R_T} T_{v_1}$ for every $x \in X_1$, since $v_1 \in N(x_2)$ and $v_1 \notin N(x)$ for every $x \in X_1$. Moreover, T_{v_1} does not intersect T_{v_0} in R_T, since $v_0 \notin N(v_1)$. Thus, either $T_{v_1} \ll_{R_T} T_{v_0}$ or $T_{v_0} \ll_{R_T} T_{v_1}$. If $T_{v_1} \ll_{R_T} T_{v_0}$, then $T_x \ll_{R_T} T_{v_1} \ll_{R_T} T_{v_0}$ for every $x \in X_1$, and thus $v_0 \notin N = N(X_1)$, which is a contradiction. Thus, $T_{v_1} \ll_{R_T} T_{v_0}$. This completes the proof of the lemma. ■

Lemma 27 *Let $v_i \in H_i$, for some $i \geq 2$, and $(v_0, v_1, \ldots, v_i)$ be an H_i-chain of v_i. Then, for every $j = 1, 2, \ldots, i-1$,*

1. *$P_{v_{j-1}} \ll_R P_{v_j}$ and $T_{v_{j-1}} \ll_{R_T} T_{v_j}$, if j is odd,*
2. *$P_{v_j} \ll_R P_{v_{j-1}}$ and $T_{v_j} \ll_{R_T} T_{v_{j-1}}$, if j is even.*

Proof. The proof will be done by induction on j. For $j = 1$, the induction basis follows by Lemma 26. For the induction step, let $2 \leq j < i-1$. Note that $v_{j-2} \in N(v_j) \setminus N(v_{j-1})$ and $v_{j+1} \in N(v_{j-1}) \setminus N(v_j)$. Therefore, $N(v_j) \nsubseteq N(v_{j-1})$ and $N(v_{j-1}) \nsubseteq N(v_j)$, and thus P_{v_j} does not intersect $P_{v_{j-1}}$ in R by Lemma 3, since $v_{j-1}v_j \notin E$. Thus, either $P_{v_{j-1}} \ll_R P_{v_j}$ or $P_{v_j} \ll_R P_{v_{j-1}}$. Furthermore, either $T_{v_{j-1}} \ll_{R_T} T_{v_j}$ or $T_{v_j} \ll_{R_T} T_{v_{j-1}}$, since $v_{j-1}v_j \notin E$.

Let j be odd, i.e. $j-1$ is even, and suppose by induction hypothesis that $P_{v_{j-1}} \ll_R P_{v_{j-2}}$ and $T_{v_{j-1}} \ll_{R_T} T_{v_{j-2}}$. If $P_{v_j} \ll_R P_{v_{j-1}}$ (resp. $T_{v_j} \ll_{R_T} T_{v_{j-1}}$), then $P_{v_j} \ll_R P_{v_{j-2}}$ (resp. $T_{v_j} \ll_{R_T} T_{v_{j-2}}$). Thus, $v_j v_{j-2} \notin E$, i.e. $v_j \in H_{j-1}$ by Definition 8, which is a contradiction. Therefore, $P_{v_{j-1}} \ll_R P_{v_j}$ and $T_{v_{j-1}} \ll_{R_T} T_{v_j}$, if j is odd.

Let now j be even, i.e. $j-1$ is odd, and suppose by induction hypothesis that $P_{v_{j-2}} \ll_R P_{v_{j-1}}$ and $T_{v_{j-2}} \ll_{R_T} T_{v_{j-1}}$. If $P_{v_{j-1}} \ll_R P_{v_j}$ (resp. $T_{v_{j-1}} \ll_{R_T} T_{v_j}$), then $P_{v_{j-2}} \ll_R P_{v_j}$ (resp. $T_{v_{j-2}} \ll_{R_T} T_{v_j}$), and thus $v_j v_{j-2} \notin E$, which is again a contradiction. Therefore, $P_{v_j} \ll_R P_{v_{j-1}}$ and $T_{v_j} \ll_{R_T} T_{v_{j-1}}$, if j is even. This completes the induction step, and thus the lemma follows. ■

The next lemma, which follows now easily by Lemmas 24, 25, 26, and 27, will be mainly used in the following.

Lemma 28 *All vertices of $N \cup H \cup C_2 \cup C_u \setminus \{u\}$ are bounded.*

Proof. Consider first a vertex $v \in N$. Then, $v \in N(x) \cap N(x_2)$ for some $x \in X_1$ by Lemma 25. Thus, P_v intersects P_u in R, since $P_x \ll_R P_u \ll_R P_{x_2}$. Suppose that v is unbounded. Then, $\phi_v > \phi_u$, since $\phi_u = \min\{\phi_x \mid x \in V_U\}$, and thus $N(v) \subseteq N(u)$ by Lemma 3. Then, $x_2 \in N(u)$, which is a contradiction. Thus, every $v \in N$ is bounded.

Consider now a vertex $v \in H$. If $v \in H_1$, then v is bounded by Lemma 26. Suppose that $v \in H \setminus H_1$ and that v is unbounded. Then, $\phi_v > \phi_u$, since $\phi_u = \min\{\phi_x \mid x \in V_U\}$. Furthermore, $H_0 = N \subseteq N(v)$ by Definition 8, and thus $N_1(v) = N$. If $P_v \ll_R P_u$, then $P_v \ll_R P_u \ll_R P_{x_2}$, and thus $v \notin N(x_2)$, which is a contradiction to the definition of H. If P_v intersects P_u in R, then $N(v) \subseteq N(u)$ by Lemma 3, since $\phi_v > \phi_u$, and thus $x_2 \in N(u)$, which is again a contradiction. Therefore, $P_u \ll_R P_v$, i.e. $P_x \ll_R P_u \ll_R P_v$ for every $x \in X_1$, and thus P_z intersects P_u in R for every $z \in N_1(v) = N = N(X_1)$. However, z is bounded and $\phi_z > \phi_v > \phi_u$ for every $z \in N_1(v)$, since v is unbounded. Therefore, $N_1(v) \subseteq N(u)$, and thus $N_1(u) = N$, which is a contradiction by Lemma 20. Thus, every $v \in H \setminus H_1$ is bounded.

Consider finally a vertex $v \in C_2 \cup C_u \setminus \{u\}$ and suppose that v is unbounded. Then, similarly to the above, $\phi_v > \phi_u$, since $\phi_u = \min\{\phi_x \mid x \in V_U\}$. Furthermore, $N_1(v) = N$ by Lemmas 24 and 25, while also $N_1(x_2) = N$ by Lemma 20. Suppose that $P_v \ll_R P_u$, i.e. $P_v \ll_R P_u \ll_R P_{x_2}$. Then, since $N_1(v) = N_1(x_2) = N$, P_z intersects P_u in R for every $z \in N$. Furthermore, z is bounded and $\phi_z > \phi_v > \phi_u$ for every $z \in N_1(v)$, since v is unbounded. Therefore, $N_1(v) \subseteq N(u)$, and thus $N_1(u) = N$, which is a contradiction by Lemma 20. Suppose that P_v intersects P_u in R. Then, $N(v) \subseteq N(u)$ by Lemma 3, since $\phi_v > \phi_u$. Therefore, $N(v) \subset N(u)$ by Lemma 7, and thus $v \in Q_u$, which is a contradiction to the definitions of C_u and C_2. Suppose that $P_u \ll_R P_v$,

i.e. $P_x \ll_R P_u \ll_R P_v$ for every $x \in X_1$. Then, since $N_1(v) = N = N(X_1)$, P_z intersects P_u in R for every $z \in N$. Furthermore, z is bounded and $\phi_z > \phi_v > \phi_u$ for every $z \in N_1(v)$, since v is unbounded. Therefore, $N_1(v) \subseteq N(u)$, and thus $N_1(u) = N$, which is a contradiction by Lemma 20. Thus, every $v \in C_2 \cup C_u \setminus \{u\}$ is bounded. This completes the lemma. ■

Lemma 29 *For every vertex $v \in C_u \setminus \{u\}$, it holds $H_i \subseteq N(v)$ for every $i \geq 1$.*

Proof. Let v be a vertex of $C_u \setminus \{u\}$. Recall that $N_1(v) = N$ by Lemma 24. Consider first the case where $v \in N[u, w] = N(u) \cup N(w)$. The proof will be done by induction on i. For $i = 1$, consider a vertex $v_1 \in H_1$ and an H_1-chain (v_0, v_1) of v_1, where $v_0 \in H_0 = N = N(X_1)$. Since $v_0 v_1 \notin E$, either $T_{v_1} \ll_{R_T} T_{v_0}$ or $T_{v_0} \ll_{R_T} T_{v_1}$. Suppose that $T_{v_1} \ll_{R_T} T_{v_0}$. Then, since $T_x \ll_{R_T} T_{x_2}$ for every $x \in X_1$ by Lemma 19, and since $v_1 \in N(x_2) \setminus N(x)$ for every $x \in X_1$ by definition of H, it follows that $T_x \ll_{R_T} T_{v_1}$ for every $x \in X_1$. That is, $T_x \ll_{R_T} T_{v_1} \ll_{R_T} T_{v_0}$ for every $x \in X_1$, and thus $v_0 \notin N(x)$ for every $x \in X_1$, which is a contradiction. Thus, $T_{v_0} \ll_{R_T} T_{v_1}$. Furthermore, $T_{x_2} \ll_{R_T} T_v$, since $T_{x_2} \ll_{R_T} T_u$ and C_u is connected. Suppose that $v_1 \notin N(v)$. Then, $T_{v_1} \ll_{R_T} T_v$, since $T_{x_2} \ll_{R_T} T_v$ and $v_1 \in N(x_2) \setminus N(v)$. That is, $T_{v_0} \ll_{R_T} T_{v_1} \ll_{R_T} T_v$, and thus $v_0 \notin N(v)$, which is a contradiction, since $N_1(v) = N$ and $v_0 \in N$. Thus, $v_1 \in N(v)$ for every $v_1 \in H_1$. This proves the induction basis.

For the induction step, let $i \geq 2$, and suppose that $v' \in N(v)$ for every $v' \in H_j$, where $0 \leq j \leq i-1$. Let $v_i \in H_i$ and $(v_0, v_1, \ldots, v_{i-2}, v_{i-1}, v_i)$ be an H_i-chain of v_i. Note that v_{i-2} exists, since $i \geq 2$, and thus $v_{i-1} v_{i-2} \notin E$ and $v_i v_{i-2} \in E$ by Definition 8. For the sake of contradiction, suppose that $v_i \notin N(v)$. We will now prove that $P_v \ll_R P_{x_2}$. Otherwise, suppose first that $P_{x_2} \ll_R P_v$. Then, $P_u \ll_R P_{x_2} \ll_R P_v$ and $P_w \ll_R P_{x_2} \ll_R P_v$, and thus $v \notin N[u, w] = N(u) \cup N(w)$, which is a contradiction to the assumption on v. Suppose now that P_v intersects P_{x_2} in R. Then, either $N(x_2) \subseteq N(v)$ or $N(v) \subseteq N(x_2)$ by Lemma 3, since $v \notin N(x_2)$ by the definition of C_u. If $N(x_2) \subseteq N(v)$, then $v_i \in N(v)$, since $v_i \in N(x_2)$, which is a contradiction. Let $N(v) \subseteq N(x_2)$. Then, since C_u is connected and $v \neq u$, v is adjacent to at least one vertex $z \in C_u$, and thus $z \in N(x_2)$, which is a contradiction to the definition of C_u. Thus, $P_v \ll_R P_{x_2}$.

Recall that $v_{i-1} \in N(v)$ by the induction hypothesis. Since $v \in N(v_{i-1}) \setminus N(v_i)$ and $v_{i-2} \in N(v_i) \setminus N(v_{i-1})$, it follows that P_{v_i} does not intersect $P_{v_{i-1}}$ in R by Lemma 3. Similarly, P_{v_i} does not intersect P_v in R, since $x_2 \in N(v_i) \setminus N(v)$ and $v_{i-1} \in N(v) \setminus N(v_i)$. Thus, since $v_{i-1} \in N(v)$, either $P_{v_i} \ll_R P_{v_{i-1}}$ and $P_{v_i} \ll_R P_v$, or $P_{v_{i-1}} \ll_R P_{v_i}$ and $P_v \ll_R P_{v_i}$. Suppose that $P_{v_i} \ll_R P_{v_{i-1}}$ and $P_{v_i} \ll_R P_v$. Then, $P_{v_i} \ll_R P_v \ll_R P_{x_2}$, and thus $v_i \notin N(x_2)$, which is a contradiction.

Thus, $P_{v_{i-1}} \ll_R P_{v_i}$ and $P_v \ll_R P_{v_i}$. Recall now by Lemmas 26 and 27 that either $P_{v_{i-2}} \ll_R P_{v_{i-1}}$ or $P_{v_{i-1}} \ll_R P_{v_{i-2}}$. If $P_{v_{i-2}} \ll_R P_{v_{i-1}}$, then $P_{v_{i-2}} \ll_R P_{v_{i-1}} \ll_R P_{v_i}$, and thus $v_i v_{i-2} \notin E$, which is a contradiction. Therefore, $P_{v_{i-1}} \ll_R P_{v_{i-2}}$. Thus, also $T_{v_{i-1}} \ll_{R_T} T_{v_{i-2}}$ and i is odd, by Lemmas 26 and 27. Since $v_{i-1} v_i \notin E$, either $T_{v_i} \ll_{R_T} T_{v_{i-1}}$ or $T_{v_{i-1}} \ll_{R_T} T_{v_i}$. If $T_{v_i} \ll_{R_T} T_{v_{i-1}}$, then $T_{v_i} \ll_{R_T} T_{v_{i-1}} \ll_{R_T} T_{v_{i-2}}$, and thus $v_i v_{i-2} \notin E$, which is a contradiction. Therefore, $T_{v_{i-1}} \ll_{R_T} T_{v_i}$, and thus $T_v \ll_{R_T} T_{v_i}$, since $v \in N(v_{i-1}) \setminus N(v_i)$. Recall also that $T_{x_2} \ll_{R_T} T_v$, since $T_{x_2} \ll_{R_T} T_u$ and C_u is connected. That is, $T_{x_2} \ll_{R_T} T_v \ll_{R_T} T_{v_i}$, and thus $v_i \notin N(x_2)$, which is a contradiction. Thus, $v_i \in N(v)$. This completes the induction step.

Summarizing, we have proved that $H_i \subseteq N(v)$ for every $i \geq 1$ and for every vertex $v \in C_u \setminus \{u\}$, such that $v \in N[u, w]$. This holds in particular for w, i.e. $H_i \subseteq N(w)$ for every $i \geq 1$, since $w \in N(u)$ is a vertex of $C_u \setminus \{u\}$. Consider now the case where $v \notin N[u, w]$. Then, since $w \in N(u)$, either $T_u \ll_{R_T} T_v$ and $T_w \ll_{R_T} T_v$, or $T_v \ll_{R_T} T_u$ and $T_v \ll_{R_T} T_w$. Suppose that $T_u \ll_{R_T} T_v$, i.e. $T_x \ll_{R_T} T_{x_2} \ll_{R_T} T_u \ll_{R_T} T_v$ for every $x \in X_1$ by Lemma 19. Recall that $N_1(v) = N$ by Lemma 24. That is, T_z intersects T_u in R_T, i.e. $z \in N(u)$, for every $z \in N_1(v) = N$, and thus $N_1(u) = N$, which is a contradiction by Lemma 20. Thus, $T_v \ll_{R_T} T_u$ and $T_v \ll_{R_T} T_w$. Then, $T_{x_2} \ll_{R_T} T_v$, since $T_{x_2} \ll_{R_T} T_u$ and C_u is connected. That is, $T_{x_2} \ll_{R_T} T_v \ll_{R_T} T_w$. Then, since every $z \in H_i$, $i \geq 1$, is adjacent to both x_2 and w, it follows that T_z intersects T_v in R_T, i.e. $z \in N(v)$, for every $z \in H_i$, where $i \geq 1$. Thus, $H_i \subseteq N(v)$ for every $i \geq 1$ and for every vertex $v \in C_u \setminus \{u\}$, such that $v \notin N[u, w]$. This completes the proof of the lemma. ■

Lemma 30 *For every vertex $v \in C_2$, it holds $H_i \subseteq N(v)$ for every $i \geq 1$.*

Proof. Recall that $C_2 = \mathcal{A}_2 \cup \mathcal{B}_2$, where $A_j \subseteq D_2$ for every $A_j \in \mathcal{B}_2$, $k+1 \leq j \leq \ell$, and $\mathcal{A}_2$ includes exactly those components A_i, $1 \leq i \leq k$, for which all vertices of A_i are adjacent to all vertices of $\widetilde{H}$. Therefore, if $v \in A_i$ for some component $A_i \in \mathcal{A}_2$, then $H \subseteq \widetilde{H} \subseteq N(v)$ by definition, and thus $H_i \subseteq N(v)$ for every $i \geq 1$.

Let now $v \in A_j$, for some $A_j \in \mathcal{B}_2$, and suppose first that $v \notin N(x_2)$. Then, since $v \in D_2 \subseteq S_2 \subseteq V_0(u)$, it follows that $T_v \ll_{R_T} T_u$ and that $T_{x_2} \ll_{R_T} T_v$ by Lemma 16 (since $v \notin N(x_2)$), i.e. $T_{x_2} \ll_{R_T} T_v \ll_{R_T} T_u$. Moreover, $v \notin N(w)$ by definition of $\widetilde{C}_2$. Thus, $T_v \ll_{R_T} T_w$, since $T_v \ll_{R_T} T_u$ and $w \in N(u) \setminus N(v)$. That is, $T_{x_2} \ll_{R_T} T_v \ll_{R_T} T_w$. Let now $z \in H_i$, for some $i \geq 1$. Then, $z \in N(x_2)$ and $z \in N(w)$ by Lemma 29, and thus T_z intersects T_v in R_T, i.e. $z \in N(v)$. Therefore, $H_i \subseteq N(v)$ for every $i \geq 1$, where $v \notin N(x_2)$.

Suppose now that $v \in N(x_2)$. We will prove by contradiction that $H_i \subseteq N(v)$ for every $i \geq 1$. Suppose otherwise that there exists an index $i \geq 1$, such that $v_i \notin N(v)$, for some vertex $v_i \in H_i$. W.l.o.g. let i be the smallest such index, i.e. $v' \in N(v)$ for every $v' \in H_j$, where $0 \leq j \leq i-1$ (recall that $H_0 = N$, and thus $v' \in N(v)$ for every $v' \in H_0$ by Lemma 25).

Let $(v_0, v_1, \ldots, v_{i-1}, v_i)$ be an H_i-chain of v_i. If $i = 1$, then P_{v_1} does not intersect P_{v_0} in R by Lemma 26. If $i \geq 2$, then $v_{i-2} \in N(v_i) \setminus N(v_{i-1})$ and $v \in N(v_{i-1}) \setminus N(v_i)$; therefore $N(v_{i-1}) \nsubseteq N(v_i)$ and $N(v_i) \nsubseteq N(v_{i-1})$, and thus P_{v_i} does not intersect $P_{v_{i-1}}$ in R by Lemma 3. That is, P_{v_i} does not intersect $P_{v_{i-1}}$ in R for every $i \geq 1$. Recall now that $v_i \in N[u,w]$ by definition of H, and that $v \notin N[u,w]$ by definition of $\widetilde{C}_2$. If $v_i \in N(u)$ (resp. $v_i \in N(w)$), then $u \in N(v_i) \setminus N(v)$ (resp. $w \in N(v_i) \setminus N(v)$). Furthermore, $v_{i-1} \in N(v) \setminus N(v_i)$, i.e. $N(v_i) \nsubseteq N(v)$ and $N(v) \nsubseteq N(v_i)$, and thus P_{v_i} does not intersect P_v in R by Lemma 3. Therefore, since $vv_{i-1} \in E$, it follows hat either $P_{v_{i-1}} \ll_R P_{v_i}$ and $P_v \ll_R P_{v_i}$, or $P_{v_i} \ll_R P_{v_{i-1}}$ and $P_{v_i} \ll_R P_v$.

Suppose first that $P_{v_{i-1}} \ll_R P_{v_i}$ and $P_v \ll_R P_{v_i}$. Recall that $v_i \in N[u,w]$ and that $v \notin N[u,w]$. Let $v_i \in N(u)$ (resp. $v_i \in N(w)$). Then, P_v does not intersect P_u (resp. P_w) in R by Lemma 3, since $x_2 \in N(v) \setminus N[u,w]$ and $v_i \in N(u) \setminus N(v)$ (resp. $v_i \in N(w) \setminus N(v)$). Thus, since $P_u \ll_R P_{x_2}$ (resp. $P_w \ll_R P_{x_2}$) and $v \in N(x_2) \setminus N(u)$ (resp. $v \in N(x_2) \setminus N(w)$), it follows that $P_u \ll_R P_v$ (resp. $P_w \ll_R P_v$). That is, $P_u \ll_R P_v \ll_R P_{v_i}$ (resp. $P_w \ll_R P_v \ll_R P_{v_i}$), i.e. $v_i \notin N(u)$ (resp. $v_i \notin N(w)$), which is a contradiction.

Suppose now that $P_{v_i} \ll_R P_{v_{i-1}}$ and $P_{v_i} \ll_R P_v$. Then, $i \neq 1$ by Lemma 26. That is, $i \geq 2$, i.e. v_{i-2} exists. Recall by Lemmas 26 and 27 that either $P_{v_{i-1}} \ll_R P_{v_{i-2}}$ or $P_{v_{i-2}} \ll_R P_{v_{i-1}}$. If $P_{v_{i-1}} \ll_R P_{v_{i-2}}$, then $P_{v_i} \ll_R P_{v_{i-1}} \ll_R P_{v_{i-2}}$, and thus $v_i v_{i-2} \notin E$, which is a contradiction. Therefore, $P_{v_{i-2}} \ll_R P_{v_{i-1}}$, and thus also $T_{v_{i-2}} \ll_{R_T} T_{v_{i-1}}$ and i is even by Lemmas 26 and 27. Since $v_{i-1}v_i \notin E$, either $T_{v_{i-1}} \ll_{R_T} T_{v_i}$ or $T_{v_i} \ll_{R_T} T_{v_{i-1}}$. If $T_{v_{i-1}} \ll_{R_T} T_{v_i}$, then $T_{v_{i-2}} \ll_{R_T} T_{v_{i-1}} \ll_{R_T} T_{v_i}$, and thus $v_i v_{i-2} \notin E$, which is a contradiction. Therefore, $T_{v_i} \ll_{R_T} T_{v_{i-1}}$, and thus also $T_{v_i} \ll_{R_T} T_v$, since $v \in N(v_{i-1}) \setminus N(v_i)$. Recall also that $T_{x_2} \ll_{R_T} T_u$ and $T_{x_2} \ll_{R_T} T_w$. Thus, also $T_v \ll_{R_T} T_u$ and $T_v \ll_{R_T} T_w$, since $v \in N(x_2) \setminus N[u,w]$. That is, $T_{v_i} \ll_{R_T} T_v \ll_{R_T} T_u$ and $T_{v_i} \ll_{R_T} T_v \ll_{R_T} T_w$, i.e. $v_i \notin N[u,w]$, which is a contradiction. Thus, $H_i \subseteq N(v)$ for every $i \geq 1$. This completes the proof of the lemma. ■

4.5 The recursive definition of the vertex subsets H'_i, $i \geq 0$, of H

Similarly to Definitions 8 and 9, we partition in the following the set $H \setminus \bigcup_{i=1}^{\infty} H_i$ into the subsets $H'_0, H'_1, \ldots$.

Definition 10 *Let $H' = H \setminus \bigcup_{i=1}^{\infty} H_i$ and $H'_0 = \{x \in H' \mid xv \in E$ for some $v \in V \setminus Q_u \setminus N[u] \setminus V_0(u)\}$. Furthermore, $H'_i = \{x \in H' \setminus \bigcup_{j=0}^{i-1} H'_j \mid H'_{i-1} \nsubseteq N(x)\}$ for every $i \geq 1$.*

It is now easy to see by Definition 10 that either $H'_i = \emptyset$ for every $i \in \mathbb{N} \cup \{0\}$, or there exists some $p \in \mathbb{N} \cup \{0\}$, such that $H'_p \neq \emptyset$ and $H'_i = \emptyset$ for every $i > p$. That is, either $\bigcup_{i=0}^{\infty} H'_i = \emptyset$, or $\bigcup_{i=0}^{\infty} H'_i = \bigcup_{i=0}^{p} H'_i$, for some $p \in \mathbb{N} \cup \{0\}$, while $\bigcup_{i=0}^{\infty} H'_i \subseteq H'$ by Definition 10. Furthermore, it is easy to observe by Definitions 8 and 10 that every vertex of $H \setminus \bigcup_{i=1}^{\infty} H_i \setminus \bigcup_{i=0}^{\infty} H'_i$ is adjacent to every vertex of $N(X_1) \cup \bigcup_{i=1}^{\infty} H_i \cup \bigcup_{i=0}^{\infty} H'_i$, and to no vertex of $V \setminus Q_u \setminus N[u] \setminus V_0(u)$.

Definition 11 *Let $v_i \in H'_i$, for some $i \geq 1$. Then, a sequence $(v_0, v_1, \ldots, v_{i-1}, v_i)$ of vertices, such that $v_j \in H'_j$, $j = 0, 1, \ldots, i-1$, and $v_{j-1}v_j \notin E$, $j = 1, 2, \ldots, i$, is an H'_i-chain of v_i.*

It is easy to see by Definition 10 that for every set $H'_i \neq \emptyset$, $i \geq 1$, and for every vertex $v_i \in H'_i$, there exists at least one H'_i-chain of v_i. Now, similarly to Lemmas 26 and 27, we state the following two lemmas.

Lemma 31 *Let $v_1 \in H'_1$ and (v_0, v_1) be an H'_1-chain of v_1. Then, $v_0, v_1 \in N(u)$, $P_{v_1} \ll_R P_{v_0}$ and $T_{v_1} \ll_{R_T} T_{v_0}$.*

Proof. First, recall that there exists a bounded covering vertex u^* of u by Lemma 4, and thus $w \in N(u) \subseteq N(u^*)$. Let $y \in V \setminus Q_u \setminus N[u] \setminus V_0(u)$ be a vertex, such that $yv_0 \in E$; such a vertex y exists by Definition 10. Then, $y \notin N(w)$, since either $P_w \ll_R P_{x_2} \ll_R P_y$ or $P_y \ll_R P_x \ll_R P_w$ for every $x \in X_1$ by Lemma 21. Consider the trapezoid representation R_T. Then, either $T_{x_2} \ll_{R_T} T_y$ or $T_y \ll_{R_T} T_x$ for every $x \in X_1$ by Lemma 22. Suppose that $T_y \ll_{R_T} T_x$ for every $x \in X_1$, i.e. $T_y \ll_{R_T} T_x \ll_{R_T} T_{x_2}$ for every $x \in X_1$. Then, since $v_0 \in N(y)$ and $v_0 \in N(x_2)$, T_{v_0} intersects T_x in R_T for every $x \in X_1$, and thus $v_0 \in N(X_1)$. This is a contradiction, since $v_0 \in H'_0 \subseteq H$, and since H is an induced subgraph of $G \setminus Q_u \setminus N[X_1]$. Thus, $T_{x_2} \ll_{R_T} T_y$.

Since $y \notin N(u)$ by the assumption on y, either $T_y \ll_{R_T} T_u$ or $T_u \ll_{R_T} T_y$. Suppose that $T_y \ll_{R_T} T_u$, i.e. $T_{x_2} \ll_{R_T} T_y \ll_{R_T} T_u$. Then, also $T_{x_2} \ll_{R_T} T_y \ll_{R_T} T_w$, since $w \in N(u)$ and $w \notin N(y)$. Note that $y \notin N(u^*)$, since otherwise $y \in V_0(u)$, which is a contradiction. Thus, since also $w \in N(u^*)$, it follows that $T_{x_2} \ll_{R_T} T_y \ll_{R_T} T_{u^*}$. Then, since $x_2, u^* \in V_0(u)$, and since $V_0(u)$ is connected, T_y intersects T_z for some $z \in V_0(u)$, and thus $y \in V_0(u)$, which is a contradiction. Therefore, $T_u \ll_{R_T} T_y$, i.e. $T_{x_2} \ll_{R_T} T_u \ll_{R_T} T_y$. Thus, since $v_0 \in N(x_2)$ and $v_0 \in N(y)$, T_{v_0} intersects T_u in R_T, i.e. $v_0 \in N(u)$; in particular, v_0 is bounded.

Since $v_1v_0 \notin E$, either $T_{v_0} \ll_{R_T} T_{v_1}$ or $T_{v_1} \ll_{R_T} T_{v_0}$. Suppose that $T_{v_0} \ll_{R_T} T_{v_1}$. Recall that $yv_1 \notin E$ by Definition 10, since $y \in V \setminus Q_u \setminus N[u] \setminus V_0(u)$ and $v_1 \in H_1$. That is, either $T_{v_1} \ll_{R_T} T_y$ or $T_y \ll_{R_T} T_{v_1}$. If $T_{v_1} \ll_{R_T} T_y$, then $T_{v_0} \ll_{R_T} T_{v_1} \ll_{R_T} T_y$, i.e. $yv_0 \notin E$, which is a contradiction. If $T_y \ll_{R_T} T_{v_1}$, then $T_{x_2} \ll_{R_T} T_y \ll_{R_T} T_{v_1}$, i.e. $v_1 \notin N(x_2)$, which is a contradiction. Thus, $T_{v_1} \ll_{R_T} T_{v_0}$.

Consider now the projection representation R, and recall that $v_1v_0, v_1y \notin E$. Furthermore, recall that $v_0 \notin N(\widetilde{X}_1)$ by definition of H, and that either $P_{x_2} \ll_R P_y$ or $P_y \ll_R P_x$ for every $x \in X_1$ by Lemma 21. Suppose that $P_y \ll_R P_x$ for every $x \in X_1$, and thus $P_y \ll_R P_x \ll_R P_u \ll_R P_{x_2}$ for every $x \in \widetilde{X}_1 \subseteq X_1$. Then, P_{v_0} intersects P_x in R for every $x \in \widetilde{X}_1$, since $v_0 \in N(y) \cap N(x_2)$. Furthermore, $v_0x \notin E$ for every $x \in \widetilde{X}_1$, since $v_0 \notin N(\widetilde{X}_1)$. Thus, every $x \in \widetilde{X}_1$ is unbounded and $\phi_x > \phi_{v_0} > \phi_u$, since v_0 is bounded and $v_0 \in N(u)$, as we proved above. Moreover, since $\widetilde{X}_1$ is connected, and since no two unbounded vertices are adjacent, it follows that $\widetilde{X}_1$ has one vertex, i.e. $\widetilde{X}_1 = \{x_1\}$. Thus, $N(x_1) = N(\widetilde{X}_1) \subseteq N(x_2)$ by Lemma 20, since $\widetilde{X}_1 \subseteq X_1$. Therefore, P_z intersects P_u in R, for every $z \in N(x_1)$, since $P_{x_1} \ll_R P_u \ll_R P_{x_2}$. Furthermore, z is bounded and $\phi_z > \phi_{x_1} > \phi_u$ for every $z \in N(x_1)$, since x_1 is unbounded. That is, $z \in N(u)$ for every $z \in N(x_1)$, i.e. $N(x_1) \subseteq N(u)$, and thus x_1 is an isolated vertex of $G \setminus N[u]$. Therefore, since x_1 is unbounded and u^* is bounded in R, it follows that x_1 and u^* do not lie in the same connected component of $G \setminus N[u]$. That is, $V_0(u)$ is not connected, which is a contradiction. Thus, $P_{x_2} \ll_R P_y$, i.e. $P_u \ll_R P_{x_2} \ll_R P_y$.

Suppose that P_{v_1} intersects P_y in R. Then, either $N(v_1) \subseteq N(y)$ or $N(y) \subseteq N(v_1)$ by Lemma 3, since $v_1y \notin E$. If $N(v_1) \subseteq N(y)$, then $x_2 \in N(y)$, which is a contradiction, since $P_{x_2} \ll_R P_y$. On the other hand, if $N(y) \subseteq N(v_1)$, then $v_0 \in N(v_1)$, since $yv_0 \in E$, which is a contradiction. Thus, P_{v_1} does not intersect P_y in R, i.e. either $P_y \ll_R P_{v_1}$ or $P_{v_1} \ll_R P_y$. If $P_y \ll_R P_{v_1}$, then $P_{x_2} \ll_R P_y \ll_R P_{v_1}$, i.e. $v_1 \notin N(x_2)$, which is a contradiction. Thus, $P_{v_1} \ll_R P_y$.

Suppose that P_{v_1} intersects P_{v_0} in R. Then, v_1 is unbounded and $\phi_{v_1} > \phi_{v_0} > \phi_u$, since v_0 is bounded and $v_0 \in N(u)$. Furthermore, note that $N_1(v_1) = N$, since otherwise $v_1 \in H_1$ by Definition 8, and thus $v_1 \notin H' = H \setminus \bigcup_{i=1}^{\infty} H_i$, which is a contradiction. Consider now a vertex $z \in N$. Then, $z \in N(x) \cap N(x_2)$, for some $x \in X_1$. Furthermore, $z \in N(v_1)$, since $N_1(v_1) = N$; thus, z is bounded and $\phi_z > \phi_{v_1} > \phi_u$, since v_1 is unbounded. On the other hand, P_z intersects P_u in R, since $P_x \ll_R P_u \ll_R P_{x_2}$ and $z \in N(x) \cap N(x_2)$. Thus $z \in N(u)$, since z is bounded and $\phi_z > \phi_u$. Since

this holds for an arbitrary $z \in N$, it follows that $N_1(u) = N$, which is a contradiction by Lemma 20. Thus, P_{v_1} does not intersect P_{v_0} in R, i.e. either $P_{v_0} \ll_R P_{v_1}$ or $P_{v_1} \ll_R P_{v_0}$. If $P_{v_0} \ll_R P_{v_1}$, then $P_{v_0} \ll_R P_{v_1} \ll_R P_y$, i.e. $y \notin N(v_0)$, which is a contradiction. Thus, $P_{v_1} \ll_R P_{v_0}$.

Recall that $v_0 \in N(u)$ as we have proved above, and thus $L(v_0) <_R L(u)$ by Lemma 1. Furthermore, $R(v_1) <_R L(v_0)$, since $P_{v_1} \ll_R P_{v_0}$, and thus $R(v_1) <_R L(u)$. On the other hand, since $v_1 \in N(x_2)$, and since $R(v_1) <_R L(u) <_R L(x_2)$, it follows that $l(x_2) <_R r(v_1)$, and thus $l(u) <_R r(v_1)$, since $P_u \ll_R P_{x_2}$. Therefore, since also $R(v_1) <_R L(u)$, P_{v_1} intersects P_u in R and $\phi_{v_1} > \phi_u$. If $v_1 \notin N(u)$, then $N(v_1) \subseteq N(u)$ by Lemma 3, and thus $x_2 \in N(u)$, since $x_2 \in N(v_1)$ by definition of H, which is a contradiction. Therefore, $v_1 \in N(u)$. This completes the proof of the lemma. ■

Lemma 32 *Let $v_i \in H'_i$, for some $i \geq 2$, and $(v_0, v_1, \ldots, v_i)$ be an H'_i-chain of v_i. Then, for every $j = 1, 2, \ldots, i-1$:*

1. *$P_{v_{j-1}} \ll_R P_{v_j}$ and $T_{v_{j-1}} \ll_{R_T} T_{v_j}$, if j is even,*
2. *$P_{v_j} \ll_R P_{v_{j-1}}$ and $T_{v_j} \ll_{R_T} T_{v_{j-1}}$, if j is odd.*

Proof. The proof will be done by induction on j. For $j = 1$, the induction basis follows by Lemma 31. For the induction step, let $2 \leq j < i$. Note that $v_{j-2} \in N(v_j) \setminus N(v_{j-1})$ and $v_{j+1} \in N(v_{j-1}) \setminus N(v_j)$. Therefore, $N(v_j) \nsubseteq N(v_{j-1})$ and $v_{j+1} \in N(v_{j-1}) \nsubseteq N(v_j)$, and thus P_{v_j} does not intersect $P_{v_{j-1}}$ in R by Lemma 3, since $v_{j-1}v_j \notin E$. Thus, either $P_{v_{j-1}} \ll_R P_{v_j}$ or $P_{v_j} \ll_R P_{v_{j-1}}$. Furthermore, clearly either $T_{v_{j-1}} \ll_{R_T} T_{v_j}$ or $T_{v_j} \ll_{R_T} T_{v_{j-1}}$, since $v_{j-1}v_j \notin E$.

Let j be even, i.e. $j-1$ is odd, and suppose by induction hypothesis that $P_{v_{j-1}} \ll_R P_{v_{j-2}}$ and $T_{v_{j-1}} \ll_{R_T} T_{v_{j-2}}$. If $P_{v_j} \ll_R P_{v_{j-1}}$ (resp. $T_{v_j} \ll_{R_T} T_{v_{j-1}}$), then $P_{v_j} \ll_R P_{v_{j-2}}$ (resp. $T_{v_j} \ll_{R_T} T_{v_{j-2}}$). Thus, $v_jv_{j-2} \notin E$, i.e. $v_j \in H'_{j-1}$ by Definition 10, which is a contradiction. Therefore, $P_{v_{j-1}} \ll_R P_{v_j}$ and $T_{v_{j-1}} \ll_{R_T} T_{v_j}$, if j is even.

Let now j be odd, i.e. $j-1$ is even, and suppose by induction hypothesis that $P_{v_{j-2}} \ll_R P_{v_{j-1}}$ and $T_{v_{j-2}} \ll_{R_T} T_{v_{j-1}}$. If $P_{v_{j-1}} \ll_R P_{v_j}$ (resp. $T_{v_{j-1}} \ll_{R_T} T_{v_j}$), then $P_{v_{j-2}} \ll_R P_{v_j}$ (resp. $T_{v_{j-2}} \ll_{R_T} T_{v_j}$), and thus $v_jv_{j-2} \notin E$, which is again a contradiction. Therefore, $P_{v_j} \ll_R P_{v_{j-1}}$ and $T_{v_j} \ll_{R_T} T_{v_{j-1}}$, if j is odd. This completes the induction step, and thus the lemma follows. ■

Lemma 33 *$H'_i \subseteq N(u)$, for every $i \geq 0$.*

Proof. The proof will be done by induction on i. For $i = 0$ and $i = 1$, the lemma follows by Lemma 31. This proves the induction basis. For the induction step, let $i \geq 2$. Suppose that $v_i \notin N(u)$, and let $(v_0, v_1, \ldots, v_{i-2}, v_{i-1}, v_i)$ be an H'_i-chain of v_i. By the induction hypothesis, $v_j \in N(u)$ for every $j = 0, 1, \ldots, i-1$. Then, in particular, $r(u) <_R r(v_{i-1})$ and $L(v_{i-1}) <_R L(u)$ by Lemma 1. Furthermore, $v_{i-2} \in N(v_i) \setminus N(v_{i-1})$ and $u \in N(v_{i-1}) \setminus N(v_i)$, i.e. $N(v_i) \nsubseteq N(v_{i-1})$ and $N(v_{i-1}) \nsubseteq N(v_i)$, and thus Lemma 3 implies that P_{v_i} does not intersect $P_{v_{i-1}}$ in R, since $v_iv_{i-1} \notin E$.

Suppose first that i is odd. Then, $P_{v_{i-2}} \ll_R P_{v_{i-1}}$ by Lemma 32. Thus, since $v_i \in N(v_{i-2})$, and since P_{v_i} does not intersect $P_{v_{i-1}}$ in R by the previous paragraph, it follows that $P_{v_i} \ll_R P_{v_{i-1}}$. Therefore, in particular, $R(v_i) <_R L(v_{i-1}) <_R L(u)$, i.e. $R(v_i) <_R L(u)$. On the other hand, $v_i \in N(x_2)$, and thus T_{v_i} intersects T_{x_2} in R_T. Therefore, since $R(v_i) <_R L(u) <_R L(x_2)$, it follows that $l(x_2) <_R r(v_i)$. Furthermore, since $P_u \ll_R P_{x_2}$, it follows that $l(u) <_R l(x_2) <_R r(v_i)$. That is, $R(v_i) <_R L(u)$ and $l(u) <_R r(v_i)$, i.e. P_{v_i} intersects P_u in R and $\phi_{v_i} > \phi_u$. If $v_i \notin N(u)$, then $N(v_i) \subseteq N(u)$ by Lemma 3, and thus $x_2 \in N(u)$, which is a contradiction. Therefore, $v_i \in N(u)$ if i is odd.

Suppose now that i is even. Then, $T_{v_{i-1}} \ll_{R_T} T_{v_{i-2}}$ by Lemma 32. Thus, since $v_i \in N(v_{i-2})$ and $v_i \notin N(v_{i-1})$, it follows that $T_{v_{i-1}} \ll_{R_T} T_{v_i}$. Recall that $T_{x_2} \ll_{R_T} T_u$. Since we assumed that $v_i \notin N(u)$, either $T_{v_i} \ll_{R_T} T_u$ or $T_u \ll_{R_T} T_{v_i}$. If $T_{v_i} \ll_{R_T} T_u$, then $T_{v_{i-1}} \ll_{R_T} T_{v_i} \ll_{R_T} T_u$, i.e. $v_{i-1} \notin N(u)$, which is a contradiction by the induction hypothesis. If $T_u \ll_{R_T} T_{v_i}$, then $T_{x_2} \ll_{R_T} T_u \ll_{R_T} T_{v_i}$, i.e. $v_i \notin N(x_2)$, which is a contradiction. Thus, $v_i \in N(u)$ if i is even. This completes the induction step and the lemma follows. ■

Now, similarly to Lemmas 29, and 30, we state the following two lemmas.

Lemma 34 *For every vertex $v \in C_u \setminus \{u\}$, it holds $H'_i \subseteq N(v)$ for every $i \geq 0$.*

Proof. Let v be a vertex of $C_u \setminus \{u\}$. Recall that $N_1(v) = N$ by Lemma 24. Consider first the case where $v \in N(u) \cup N(w)$. The proof will be done by induction on i. For $i = 0$, consider a vertex $v_0 \in H'_0$ and a vertex $y \in V \setminus Q_u \setminus N[u] \setminus V_0(u)$, such that $yv_0 \in E$; such a vertex y exists by Definition 10. Recall that $T_{x_2} \ll_{R_T} T_u \ll_{R_T} T_y$ and that $P_u \ll_R P_{x_2} \ll_R P_y$ by the proof of Lemma 31.

Let first $v \notin N(u)$ (and thus $v \in N(w)$). If $T_u \ll_{R_T} T_v$, i.e. $T_x \ll_{R_T} T_u \ll_{R_T} T_v$ for every $x \in X_1$, then T_z intersects T_u in R_T for every $z \in N_1(v) = N$. Thus, $N_1(u) = N$, which is a contradiction by Lemma 20. Therefore, $T_v \ll_{R_T} T_u$. Furthermore, $T_{x_2} \ll_{R_T} T_v \ll_{R_T} T_u$, since $T_{x_2} \ll_{R_T} T_u$, and since $v \in C_u$ and C_u is connected. That is, $T_{x_2} \ll_{R_T} T_v \ll_{R_T} T_u \ll_{R_T} T_y$. Then, T_{v_0} intersects T_v in R_T, since $v_0 \in N(x_2) \cap N(y)$, i.e. $v_0 \in N(v)$.

Let now $v \in N(u)$, and thus v is bounded and $\phi_v > \phi_u$ in the projection representation R. Suppose that $v \in N(y)$. Then, P_v intersects P_{x_2} in R, since $P_u \ll_R P_{x_2} \ll_R P_y$, and since $v \in N(u)$ and $v \in N(y)$. Recall that $v \notin N(x_2)$, since $v \in C_u$. Thus, since v is bounded, it follows that x_2 is unbounded and $\phi_{x_2} > \phi_v > \phi_u$. Recall that $N_1(x_2) = N$ by Lemma 20. Consider now a vertex $z \in N$, i.e. $z \in N(x) \cap N(x_2)$ for some $x \in X_1$. Then, z is bounded and $\phi_z > \phi_{x_2} > \phi_u$, since x_2 is unbounded. Furthermore, P_z intersects P_u in R, since $P_x \ll_R P_u \ll_R P_{x_2}$ and $z \in N(x) \cap N(x_2)$, and thus $z \in N(u)$. Since this holds for an arbitrary $z \in N$, it follows that $N_1(u) = N$, which is a contradiction by Lemma 20. Thus, $v \notin N(y)$. Then, $T_v \ll_{R_T} T_y$, since $T_u \ll_{R_T} T_y$, and since $v \in N(u)$ and $v \notin N(y)$. Furthermore, $T_{x_2} \ll_{R_T} T_v$, since $T_{x_2} \ll_{R_T} T_u$, and since $v \in N(u)$ and $v \notin N(x_2)$. Therefore, $T_{x_2} \ll_{R_T} T_v \ll_{R_T} T_y$, and thus T_{v_0} intersects T_v in R_T, i.e. $v_0 \in N(v)$, since $v_0 \in N(x_2) \cap N(y)$. Summarizing, $v_0 \in N(v)$ for every vertex $v_0 \in H'_0$ and for every vertex $v \in C_u \setminus \{u\}$, such that $v \in N(u) \cup N(w)$, i.e. $H'_0 \subseteq N(v)$ for all these vertices v. This proves the induction basis.

For the induction step, let $i \geq 1$, and suppose that $v' \in N(v)$ for every $v' \in H_j$, where $0 \leq j \leq i-1$. Let $v_i \in H_i$ and $(v_0, v_1, \ldots, v_{i-2}, v_{i-1}, v_i)$ be an H_i-chain of v_i. For the sake of contradiction, suppose that $v_i \notin N(v)$. We will first prove that $P_v \ll_R P_{x_2}$. Otherwise, suppose first that $P_{x_2} \ll_R P_v$. Then, $P_u \ll_R P_{x_2} \ll_R P_v$ and $P_w \ll_R P_{x_2} \ll_R P_v$, and thus $v \notin N(u) \cup N(w)$, which is a contradiction to the assumption on v. Suppose now that P_v intersects P_{x_2} in R. Then, either $N(x_2) \subseteq N(v)$ or $N(v) \subseteq N(x_2)$ by Lemma 3, since $v \notin N(x_2)$ by definition of $\widetilde{C}_2$. If $N(x_2) \subseteq N(v)$, then $v_i \in N(v)$, since $v_i \in N(x_2)$, which is a contradiction. Let $N(v) \subseteq N(x_2)$. Then, since C_u is connected with at least two vertices, v is adjacent to at least one vertex $z \in C_u$, and thus $z \in N(x_2)$, which is a contradiction. Thus, $P_v \ll_R P_{x_2}$.

Recall that $v_{i-1} \in N(v)$ by the induction hypothesis. If $i = 1$, P_{v_1} does not intersect P_{v_0} in R by Lemma 31. If $i \geq 2$, i.e. if v_{i-2} exists, then P_{v_i} does not intersect $P_{v_{i-1}}$ in R by Lemma 3, since $v_{i-2} \in N(v_i) \setminus N(v_{i-1})$ and $v \in N(v_{i-1}) \setminus N(v_i)$. Thus, P_{v_i} does not intersect $P_{v_{i-1}}$ in R for every $i \geq 1$. Similarly, P_{v_i} does not intersect P_v in R, since $x_2 \in N(v_i) \setminus N(v)$ and $v_{i-1} \in N(v) \setminus N(v_i)$. Therefore, since $v_{i-1} \in N(v)$, it follows that either $P_{v_i} \ll_R P_{v_{i-1}}$ and $P_{v_i} \ll_R P_v$, or $P_{v_{i-1}} \ll_R P_{v_i}$ and $P_v \ll_R P_{v_i}$. Suppose that $P_{v_i} \ll_R P_{v_{i-1}}$ and $P_{v_i} \ll_R P_v$. Then, $P_{v_i} \ll_R P_v \ll_R P_{x_2}$, and thus $v_i \notin N(x_2)$, which is a contradiction.

Therefore, $P_{v_{i-1}} \ll_R P_{v_i}$ and $P_v \ll_R P_{v_i}$, and thus $i \neq 1$ by Lemma 31. That is, $i \geq 2$, i.e. v_{i-2} exists. Furthermore, either $P_{v_{i-2}} \ll_R P_{v_{i-1}}$ or $P_{v_{i-1}} \ll_R P_{v_{i-2}}$ by Lemma 32. If $P_{v_{i-2}} \ll_R P_{v_{i-1}}$, then $P_{v_{i-2}} \ll_R P_{v_{i-1}} \ll_R P_{v_i}$, and thus $v_i v_{i-2} \notin E$, which is a contradiction. Therefore $P_{v_{i-1}} \ll_R P_{v_{i-2}}$, and thus also $T_{v_{i-1}} \ll_{R_T} T_{v_{i-2}}$ and i is even, by Lemma 32. Furthermore, $T_{v_{i-1}} \ll_{R_T} T_{v_i}$, since $v_i \in N(v_{i-2})$ and $v_i \notin N(v_{i-1})$. Moreover, $T_v \ll_{R_T} T_{v_i}$, since $T_{v_{i-1}} \ll_{R_T} T_{v_i}$, and since $v \in N(v_{i-1})$ and $v \notin N(v_i)$. Recall also that $T_{x_2} \ll_{R_T} T_v$, since $T_{x_2} \ll_{R_T} T_u$, and since $v \in C_u$ and C_u is connected. That is, $T_{x_2} \ll_{R_T} T_v \ll_{R_T} T_{v_i}$, and thus $v_i \notin N(x_2)$, which is a contradiction. Thus, $v_i \in N(v)$ in the case where $v \in N(u) \cup N(w)$. This completes the induction step.

Summarizing, we have proved that $H'_i \subseteq N(v)$ for every $i \geq 0$ and for every vertex $v \in C_u \setminus \{u\}$, such that $v \in N(u) \cup N(w)$. This holds in particular for w, i.e. $H'_i \subseteq N(w)$ for every $i \geq 0$, since w is a vertex of $C_u \setminus \{u\}$ and $w \in N(u) \subseteq N(u) \cup N(w)$. Consider now the case where $v \notin N(u) \cup N(w)$. Then, since $w \in N(u)$, either $T_u \ll_{R_T} T_v$ and $T_w \ll_{R_T} T_v$, or $T_v \ll_{R_T} T_u$ and $T_v \ll_{R_T} T_w$. Suppose first that $T_u \ll_{R_T} T_v$, i.e. $T_x \ll_{R_T} T_{x_2} \ll_{R_T} T_u \ll_{R_T} T_v$ for every $x \in X_1$ by Lemma 19. Recall that

$N_1(v) = N$ by Lemma 24. Then, T_z intersects T_u in R_T, i.e. $z \in N(u)$, for every $z \in N_1(v) = N$, and thus $N_1(u) = N$, which is a contradiction by Lemma 20. Therefore, $T_v \ll_{R_T} T_u$ and $T_v \ll_{R_T} T_w$. Furthermore, $T_{x_2} \ll_{R_T} T_v$, since $T_{x_2} \ll_{R_T} T_u$, and since $v \in C_u$ and C_u is connected. That is, $T_{x_2} \ll_{R_T} T_v \ll_{R_T} T_w$. Then, since every $z \in H'_i$, $i \geq 0$, is adjacent to both x_2 and w, as we proved above, it follows that T_z intersects T_v in R_T, i.e. $z \in N(v)$, for every $z \in H'_i$, where $i \geq 0$. Thus, $H'_i \subseteq N(v)$ for every $i \geq 0$ and for every vertex $v \in C_u \setminus \{u\}$, such that $v \notin N(u) \cup N(w)$. This completes the proof of the lemma. ■

Lemma 35 *For every vertex $v \in C_2$, it holds $H'_i \subseteq N(v)$ for every $i \geq 0$.*

Proof. Recall that $C_2 = \mathcal{A}_2 \cup \mathcal{B}_2$, where $A_j \subseteq D_2$ for every $A_j \in \mathcal{B}_2$, $k+1 \leq j \leq \ell$, and $\mathcal{A}_2$ includes exactly those components A_i, $1 \leq i \leq k$, for which all vertices of A_i are adjacent to all vertices of $\widetilde{H}$. Therefore, if $v \in A_i$ for some component $A_i \in \mathcal{A}_2$, then $H' \subseteq H \subseteq \widetilde{H} \subseteq N(v)$ by definition, and thus $H'_i \subseteq N(v)$ for every $i \geq 0$.

Let now $v \in A_j$, for some $A_j \in \mathcal{B}_2$, and thus $v \in D_2$. Suppose first that $v \notin N(x_2)$. Then, $T_{x_2} \ll_{R_T} T_v$ by Lemma 16, and $T_v \ll_{R_T} T_u$, since $v \in D_2 \subseteq S_2 \subseteq V_0(u)$. Moreover, $v \notin N(w)$, since otherwise $v \in C_u$, which is a contradiction to the definition of C_2. Thus, $T_v \ll_{R_T} T_w$, since $T_v \ll_{R_T} T_u$, and since $w \in N(u)$ and $w \notin N(v)$. That is, $T_{x_2} \ll_{R_T} T_v \ll_{R_T} T_w$. Let now $z \in H'_i$, for some $i \geq 0$. Then, $z \in N(x_2)$ by definition of H' and $z \in N(w)$ by Lemma 34, and thus T_z intersects T_v in R_T, i.e. $z \in N(v)$. Therefore, $H'_i \subseteq N(v)$ for every $i \geq 0$, in the case where $v \notin N(x_2)$.

Suppose now that $v \in N(x_2)$. We will prove by induction on i that $H'_i \subseteq N(v)$ for every $i \geq 0$. For $i = 0$, let first $v_0 \in H'_0$ and $y \in V \setminus Q_u \setminus N[u] \setminus V_0(u)$ be a vertex, such that $yv_0 \in E$; such a vertex y exists by Definition 10. For the sake of contradiction, assume that $v_0 \notin N(v)$. Recall that $v_0 \in N(u)$ by Lemma 33, and thus v_0 is bounded and $\phi_{v_0} > \phi_u$. Suppose that P_{v_0} intersects P_v in R. Then, v is unbounded and $\phi_v > \phi_{v_0} > \phi_u$, since v_0 is bounded and $v_0 \notin N(v)$. Recall that $N_1(v) = N$ by Lemma 25. Consider now a vertex $z \in N$, i.e. $z \in N(x) \cap N(x_2)$ for some $x \in X_1$. Then, $z \in N(v)$, since $N_1(v) = N$, and thus z is bounded and $\phi_z > \phi_v > \phi_u$, since v is unbounded. On the other hand, P_z intersects P_u in R, since $P_x \ll_R P_u \ll_R P_{x_2}$ and $z \in N(x) \cap N(x_2)$. Thus, $z \in N(u)$, since z is bounded and $\phi_z > \phi_u$. Since this holds for an arbitrary $z \in N$, it follows that $N_1(u) = N$, which is a contradiction by Lemma 20. Thus, P_{v_0} does not intersect P_v in R, i.e. either $P_v \ll_R P_{v_0}$ or $P_{v_0} \ll_R P_v$.

Let first $P_v \ll_R P_{v_0}$. Suppose that P_v intersects P_u in R. Recall that $v \notin N(u)$, since $v \in C_2$, and thus either $N(u) \subseteq N(v)$ or $N(v) \subseteq N(u)$ by Lemma 3. If $N(u) \subseteq N(v)$, then $v_0 \in N(v)$, which is a contradiction. If $N(v) \subseteq N(u)$, then $x_2 \in N(u)$, which is again a contradiction. Thus, P_v does not intersect P_u in R, i.e. either $P_v \ll_R P_u$ or $P_u \ll_R P_v$. If $P_v \ll_R P_u$, then $P_v \ll_R P_u \ll_R P_{x_2}$, i.e. $v \notin N(x_2)$, which is a contradiction to the assumption on v. Thus, $P_u \ll_R P_v$. Moreover, since we assumed that $P_v \ll_R P_{v_0}$, it follows that $P_u \ll_R P_v \ll_R P_{v_0}$, and thus $v_0 \notin N(u)$, which is a contradiction by Lemma 33.

Let now $P_{v_0} \ll_R P_v$. Suppose that P_v intersects P_y in R. Recall that $v \in V_0(u)$ by Lemma 18, and thus $vy \notin E$, since otherwise $y \in V_0(u)$, which is a contradiction. Thus, either $N(y) \subseteq N(v)$ or $N(v) \subseteq N(y)$ by Lemma 3. If $N(y) \subseteq N(v)$, then $v_0 \in N(v)$, which is a contradiction. If $N(v) \subseteq N(y)$, then $x_2 \in N(y)$ (since we assumed that $x_2 \in N(v)$), and thus $y \in V_0(u)$, which is a contradiction. Thus, P_v noes not intersect P_y in R, i.e. either $P_v \ll_R P_y$ or $P_y \ll_R P_v$. If $P_v \ll_R P_y$, then $P_{v_0} \ll_R P_v \ll_R P_y$, i.e. $yv_0 \notin E$, which is a contradiction. Suppose that $P_y \ll_R P_v$. Recall that $P_{x_2} \ll_R P_y$ by the proof of Lemma 31. Thus $P_{x_2} \ll_R P_y \ll_R P_v$, i.e. $v \notin N(x_2)$, which is a contradiction to the assumption on v. Therefore, $v_0 \in N(v)$, and thus $H'_0 \subseteq N(v)$. This proves the induction basis.

For the induction step, let $i \geq 1$, and suppose that $v' \in N(v)$ for every $v' \in H'_j$, where $0 \leq j \leq i-1$. For the sake of contradiction, assume that $v_i \notin N(v)$. Let $(v_0, v_1, \ldots, v_{i-1}, v_i)$ be an H_i-chain of v_i. If $i = 1$, P_{v_1} does not intersect P_{v_0} in R by Lemma 31. If $i \geq 2$, i.e. if v_{i-2} exists, then P_{v_i} does not intersect $P_{v_{i-1}}$ in R by Lemma 3, since $v_{i-2} \in N(v_i) \setminus N(v_{i-1})$ and $v \in N(v_{i-1}) \setminus N(v_i)$. Thus, P_{v_i} does not intersect $P_{v_{i-1}}$ in R for every $i \geq 1$. Recall now that $v_i \in N[u, w] = N(u) \cup N(w)$, since $v_i \in H$, and that $v \notin N[u, w] = N(u) \cup N(w)$ by definition of C_2. If $v_i \in N(u)$ (resp. $v_i \in N(w)$), then

$u \in N(v_i) \setminus N(v)$ (resp. $w \in N(v_i) \setminus N(v)$). Furthermore, $v_{i-1} \in N(v) \setminus N(v_i)$, i.e. $N(v_i) \nsubseteq N(v)$ and $N(v) \nsubseteq N(v_i)$, and thus P_{v_i} does not intersect P_v in R by Lemma 3. Therefore, since $v_{i-1} \in N(v)$, it follows that either $P_{v_{i-1}} \ll_R P_{v_i}$ and $P_v \ll_R P_{v_i}$ or $P_{v_i} \ll_R P_{v_{i-1}}$ and $P_{v_i} \ll_R P_v$.

Suppose first that $P_{v_{i-1}} \ll_R P_{v_i}$ and $P_v \ll_R P_{v_i}$. Recall that $v_i \in N(u)$ or $v_i \in N(w)$. Furthermore, recall that $v \in N(x_2)$ by our assumption on v. Let $v_i \in N(u)$ (resp. $v_i \in N(w)$). Then, P_v does not intersect P_u (resp. P_w) in R by Lemma 3, since $x_2 \in N(v) \setminus N(u)$ (resp. $x_2 \in N(v) \setminus N(w)$) and $v_i \in N(u) \setminus N(v)$ (resp. $v_i \in N(w) \setminus N(v)$). Therefore, since $P_u \ll_R P_{x_2}$ (resp. $P_w \ll_R P_{x_2}$) and $v \in N(x_2)$, it follows that $P_u \ll_R P_v$ (resp. $P_w \ll_R P_v$). That is, $P_u \ll_R P_v \ll_R P_{v_i}$ (resp. $P_w \ll_R P_v \ll_R P_{v_i}$), i.e. $v_i \notin N(u)$ (resp. $v_i \notin N(w)$), which is a contradiction.

Suppose now that $P_{v_i} \ll_R P_{v_{i-1}}$ and $P_{v_i} \ll_R P_v$. If $i = 1$, then $T_{v_1} \ll_{R_T} T_{v_0}$ by Lemma 31. If $i \geq 2$, i.e. if v_{i-2} exists, then $P_{v_{i-2}} \ll_R P_{v_{i-1}}$. Indeed, otherwise $P_{v_i} \ll_R P_{v_{i-1}} \ll_R P_{v_{i-2}}$, i.e. $v_i v_{i-2} \notin E$, which is a contradiction. Thus, also $T_{v_{i-2}} \ll_{R_T} T_{v_{i-1}}$ and i is odd by Lemma 32. Therefore, $T_{v_i} \ll_{R_T} T_{v_{i-1}}$ if $i \geq 2$, since otherwise $T_{v_{i-2}} \ll_{R_T} T_{v_{i-1}} \ll_{R_T} T_{v_i}$, i.e. $v_i v_{i-2} \notin E$, which is a contradiction. That is, $T_{v_i} \ll_{R_T} T_{v_{i-1}}$ for all $i \geq 1$. Therefore, since $v \in N(v_{i-1})$ and $v \notin N(v_i)$, it follows that $T_{v_i} \ll_{R_T} T_v$. Recall also that $T_{x_2} \ll_{R_T} T_u$ and $T_{x_2} \ll_{R_T} T_w$. Thus, $T_v \ll_{R_T} T_u$ and $T_v \ll_{R_T} T_w$, since we assumed that $v \in N(x_2)$, and since $v \notin N(u) \cup N(w)$ by definition of C_2. That is, $T_{v_i} \ll_{R_T} T_v \ll_{R_T} T_u$ and $T_{v_i} \ll_{R_T} T_v \ll_{R_T} T_w$, i.e. $v_i \notin N(u) \cup N(w)$, which is a contradiction. Therefore, $v_i \in N(v)$, and thus $H'_i \subseteq N(v)$. This completes the induction step; the lemma follows. ■

4.6 The subgraph G_0 of G

In this section we define and analyze the induced subgraph G_0 of G, which is based on properties we proved for the vertex sets C_u, C_2, H (cf. Sections 4.2- 4.3) and on properties we proved for the vertex subsets $H_1, H_2, \ldots$ and $H'_0, H'_1, H'_2, \ldots$ of H (cf. Sections 4.4- 4.5). Define G_0 be the graph induced in G by the vertices of $C_u \cup C_2 \cup (H \setminus \bigcup_{i=1}^{\infty} H_i \setminus \bigcup_{i=0}^{\infty} H'_i)$. Note that G_0 is an induced subgraph also of $G \setminus Q_u \setminus N[X_1]$. Furthermore, note that every vertex of $G_0 \setminus \{u\}$ is bounded by to Lemma 28. Recall that $C_2 \subseteq V_0(u)$ by Lemma 18 and that $C_u \setminus \{u\} \subseteq N(u) \cup V_0(u)$ by Lemma 23. Consider now a vertex $v \in H \setminus \bigcup_{i=1}^{\infty} H_i \setminus \bigcup_{i=0}^{\infty} H'_i$. If $v \notin N(u)$, then $v \in V_0(u)$, since $x_2 \in V_0(u)$ and $v \in N(x_2)$ by definition of H. Thus, the next observation follows.

Observation 4 *Every vertex of $G_0 \setminus \{u\}$ is bounded. Furthermore, $V(G_0) \subseteq N[u] \cup V_0(u)$.*

Lemma 36 *$G_0 \setminus \{u\}$ is a module in $G \setminus \{u\}$. In particular, $N(v) \setminus V(G_0) = N(X_1) \cup \bigcup_{i=1}^{\infty} H_i \cup \bigcup_{i=0}^{\infty} H'_i$ for every vertex $v \in V(G_0) \setminus \{u\}$.*

Proof. First recall by Lemma 17 that $N(V(C_u \cup C_2 \cup H)) \subseteq Q_u \cup N(X_1) \cup V(\mathcal{B}_1)$, where $V(\mathcal{B}_1) = \bigcup_{A_j \in \mathcal{B}_1} A_j$. Consider a vertex $q \in Q_u$. Then, since we assumed in the statement of Theorem 2 that Condition 3 holds, and since $X_1 \subseteq D_1 \subseteq V_0(u)$ by Lemma 18, it follows that $T_q \ll_{R_T} T_x \ll_{R_T} T_u$ for every $x \in X_1$. Thus, since $N(q) \subset N(u)$ by definition of Q_u, it follows that T_z intersects T_x in R_T for every $z \in N(q) \subset N(u)$ and every $x \in X_1$. Therefore, in particular, $N(q) \subseteq N(X_1)$ for every $q \in Q_u$. Thus, no vertex $q \in Q_u$ is adjacent to any vertex of $V(C_u \cup C_2 \cup H)$, since $V(C_u \cup C_2 \cup H)$ induces a subgraph of $G \setminus Q_u \setminus N[X_1] \setminus \mathcal{B}_1$ by Lemma 17. Thus, $N(V(C_u \cup C_2 \cup H)) \cap Q_u = \emptyset$, i.e. $N(V(C_u \cup C_2 \cup H)) \subseteq N(X_1) \cup V(\mathcal{B}_1)$.

Recall that $V(G_0) = C_u \cup C_2 \cup (H \setminus \bigcup_{i=1}^{\infty} H_i \setminus \bigcup_{i=0}^{\infty} H'_i)$ by definition of G_0. Consider now an arbitrary vertex $v \in V(G_0) \setminus \{u\}$. Then, it follows by the previous paragraph that

$$N(v) \setminus V(G_0) \subseteq N(X_1) \cup V(\mathcal{B}_1) \cup (\bigcup_{i=1}^{\infty} H_i \cup \bigcup_{i=0}^{\infty} H'_i) \tag{8}$$

We will prove that $N(v) \setminus V(G_0) = N(X_1) \cup (\bigcup_{i=1}^{\infty} H_i \cup \bigcup_{i=0}^{\infty} H'_i)$. If $v \in C_u \setminus \{u\}$, then $N(X_1) \subseteq N(v)$, since $N_1(v) = N = N(X_1)$ by Lemma 24. Similarly, if $v \in C_2$, then $N(X_1) \subseteq N(v)$, since $N_1(v) = N = N(X_1)$ by Lemma 25. If $v \in H \setminus \bigcup_{i=1}^{\infty} H_i \setminus \bigcup_{i=0}^{\infty} H'_i$, then $N = H_0 \subseteq N(v)$ by Definition 8 (where $N = N(X_1)$), since otherwise $v \in H_1$, which is a contradiction. That is, $N(X_1) \subseteq N(v)$ for every vertex $v \in V(G_0) \setminus \{u\}$.

If $v \in C_u \setminus \{u\}$, then $\bigcup_{i=1}^{\infty} H_i \cup \bigcup_{i=0}^{\infty} H'_i \subseteq N(v)$ by Lemmas 29 and 34. Similarly, if $v \in C_2$, then $\bigcup_{i=1}^{\infty} H_i \cup \bigcup_{i=0}^{\infty} H'_i \subseteq N(v)$ by Lemmas 30 and 35. If $v \in H \setminus \bigcup_{i=1}^{\infty} H_i \setminus \bigcup_{i=0}^{\infty} H'_i$, then $\bigcup_{i=1}^{\infty} H_i \cup \bigcup_{i=0}^{\infty} H'_i \subseteq N(v)$ by Definitions 8 and 10. Indeed, otherwise $v \in H_i$ for some $i \geq 1$, or $v \in H'_i$ for some $i \geq 0$, which is a contradiction. That is, $\bigcup_{i=1}^{\infty} H_i \cup \bigcup_{i=0}^{\infty} H'_i \subseteq N(v)$ for every vertex $v \in V(G_0) \setminus \{u\}$.

We will now prove that $N(v) \cap V(\mathcal{B}_1) = \emptyset$. Suppose for the sake of contradiction that $v' \in N(v)$, for some $v' \in V(\mathcal{B}_1)$. Note that $v' \notin N(u)$ by definition of $\widetilde{C}_2$. Let first $v \in C_u \setminus \{u\}$. Then, either $v \in V_0(u)$ or $v \in N(u)$ by Lemma 23. If $v \in V_0(u)$, then also $v' \in V_0(u)$, which is a contradiction by definition of $\mathcal{B}_1$. Suppose that $v \in N(u)$. Recall that $v' \in V(\mathcal{B}_1) \subseteq V \setminus Q_u \setminus N[u] \setminus V_0(u)$ by our assumption on v' and by Observation 3. Thus, either $P_u \ll_R P_{x_2} \ll_R P_{v'}$ or $P_{v'} \ll_R P_x \ll_R P_u$ for every $x \in X_1$ by Lemma 21. Therefore $P_u \ll_R P_{x_2} \ll_R P_{v'}$, since $P_u \ll_R P_{v'}$ for every $v' \in V(\mathcal{B}_1)$ by definition of $\mathcal{B}_1$. Then, since we assumed that $v \in N(u)$ and $v \in N(v')$, it follows that P_v intersects P_{x_2} in R. Furthermore, $x_2 \in C_2$ is a bounded vertex by Lemma 28; v is also a bounded vertex, since $v \in N(u)$. Therefore $v \in N(x_2)$, which is a contradiction by definition of C_u. Thus, $N(v) \cap V(\mathcal{B}_1) = \emptyset$ for every $v \in C_u \setminus \{u\}$.

Let now $v \in C_2$. Then $v \in V_0(u)$, since $C_2 \subseteq V_0(u)$ by Lemma 18, and thus also $v' \in V_0(u)$, since $v' \notin N(u)$. This which is a contradiction by definition of $\mathcal{B}_1$. Therefore, $N(v) \cap V(\mathcal{B}_1) = \emptyset$ for every $v \in C_2$. Let finally $v \in H \setminus \bigcup_{i=1}^{\infty} H_i \setminus \bigcup_{i=0}^{\infty} H'_i$. Recall that $v' \in V(\mathcal{B}_1) \subseteq V \setminus Q_u \setminus N[u] \setminus V_0(u)$. Thus, since $v \in H \setminus \bigcup_{i=1}^{\infty} H_i$, and since $vv' \in E$, it follows by Definition 10 that $v \in H'_0$. This is a contradiction to the assumption that $v \in H \setminus \bigcup_{i=1}^{\infty} H_i \setminus \bigcup_{i=0}^{\infty} H'_i$. Therefore, $N(v) \cap V(\mathcal{B}_1) = \emptyset$ for every $v \in H \setminus \bigcup_{i=1}^{\infty} H_i \setminus \bigcup_{i=0}^{\infty} H'_i$. That is, $N(v) \cap V(\mathcal{B}_1) = \emptyset$ for every vertex $v \in V(G_0) \setminus \{u\}$.

Summarizing, $N(X_1) \cup (\bigcup_{i=1}^{\infty} H_i \cup \bigcup_{i=0}^{\infty} H'_i) \subseteq N(v)$ and $N(v) \cap V(\mathcal{B}_1) = \emptyset$ for every vertex $v \in V(G_0) \setminus \{u\}$. Therefore, it follows by (8) that

$$N(v) \setminus V(G_0) = N(X_1) \cup (\bigcup_{i=1}^{\infty} H_i \cup \bigcup_{i=0}^{\infty} H'_i) \tag{9}$$

for every vertex $v \in V(G_0) \setminus \{u\}$. Thus, in particular, $G_0 \setminus \{u\}$ is a module in $G \setminus \{u\}$, since every vertex of $G_0 \setminus \{u\}$ has the same neighbors in $G \setminus G_0$. This completes the proof of the lemma. ■

Now let $G'_0 = G[V(G_0) \cup \{u^*\}]$. Then, since $u^* \in V_0(u)$ and $V(G_0) \subseteq N[u] \cup V_0(u)$ by Observation 4, it follows that also $V(G'_0) \subseteq N[u] \cup V_0(u)$. Furthermore, Observation 4 implies that the set $V(G'_0) \setminus \{u\}$ has only bounded vertices, since u^* is also bounded. Furthermore, since $N_1(u) \neq N$ by Lemma 20 (where $N = N(X_1)$), there exists at least one vertex $q \in N \setminus N(u)$, which is bounded by Lemma 28. Moreover $q \in N(x_2)$, since $N = N(X_1) \subseteq N(x_2)$ by Lemma 20. Therefore, P_q intersects P_u in R, since $q \in N(X_1) \cap N(x_2)$ and $P_x \ll_R P_u \ll_R P_{x_2}$ for every $x \in X_1$. Furthermore, $\phi_q < \phi_u$ in R, since otherwise $q \in N(u)$, which is a contradiction. Thus, $N(u) \subseteq N(q)$ by Lemma 3, i.e. q is a covering vertex of u. Furthermore $q \notin V(G_0)$, since $q \in N = N(X_1)$. Then, q is adjacent to all vertices of $C_2 \cup C_u \setminus \{u\}$ by Lemmas 24 and 25. Furthermore, $q \in N$ is adjacent to all vertices of $H \setminus \bigcup_{i=1}^{\infty} H_i \setminus \bigcup_{i=0}^{\infty} H'_i$ by Definition 8, since no vertex of H_1 is included in $H \setminus \bigcup_{i=1}^{\infty} H_i \setminus \bigcup_{i=0}^{\infty} H'_i$. Summarizing, q is a bounded covering vertex of u, P_q intersects P_u in R, and $\phi_q < \phi_u$ in R, and thus we may assume w.l.o.g. that $u^* = q$, as the next observation states.

Observation 5 *Without loss of generality, we may assume that $u^* \in N = N(X_1)$, i.e. $u^* \notin V(G_0)$, and that u^* is adjacent to every vertex of $V(G_0) \setminus \{u\}$; thus, in particular, G'_0 is connected.*

Moreover, $G'_0 = G[V(G_0) \cup \{u^*\}]$ has strictly less vertices than G, since no vertex of $X_1 \neq \emptyset$ is included in G'_0. We assume now that the next condition (i.e. Condition 4) holds. Assuming the correctness of Condition 4 we will prove the results of Sections 4.7-4.10. Finally, we prove the correctness of Condition 4 in Section 4.11 (cf. Lemma 46).

Condition 4 *Let $G = (V, E)$ be a connected graph in* Tolerance ∩ Trapezoid*, R be a projection representation of G with u as the only unbounded vertex, such that $V_0(u) \neq \emptyset$ is connected and $V = N[u] \cup V_0(u)$. Then, there exists a projection representation R^{**} of G with u as the only unbounded vertex, such that u has the right border property in R^{**}.*

4.7 The projection representation R_ℓ

We define now the line segment ℓ with one endpoint a_ℓ on L_1 and the other endpoint b_ℓ on L_2 as follows. First recall that $r(w) >_R r(u)$ by Lemma 1, since $w \in N(u)$. Let $\Delta = r(w) - r(u) >_R 0$ be the distance on L_2 between the lower right endpoints of P_w and P_u in R. Define in R the values $a_\ell = \min\{L(x_2), L(u) + \Delta\}$ and $b_\ell = r(w)$ as the endpoints of the line segment ℓ on L_1 and L_2, respectively. Note that $\phi_\ell \geq \phi_u$ in R, where ϕ_ℓ denotes the angle of the line segment ℓ. Recall that $\phi_w > \phi_u$ in R (since $w \in N(u)$), and thus in particular $R(w) <_R L(u) + \Delta$. Therefore, since $P_u \ll_R P_{x_2}$ and $P_w \ll_R P_{x_2}$, it follows that the line segment ℓ lies between P_u and P_{x_2} in R, as well as between P_w and P_{x_2} in R. Denote by a_u and b_u the upper and the lower endpoint of P_u in R, respectively. Then, always $a_\ell > a_u$ and $b_\ell > b_u$ by definition of the line segment ℓ.

Note that G_0' satisfies the requirements of Condition 4. Thus, since we assumed that Condition 4 holds, there exists a representation R_0' of G_0' with u as the only unbounded vertex, where u has the right border property in R_0'. Let R_0'' be the projection representation of G_0 that is obtained if we remove from R_0' the parallelogram that corresponds to u^*. Let $\varepsilon > 0$ be a sufficiently small positive number. Consider now the ε-squeezed projection representation R_0 of G_0 with respect to the line segment ℓ, which is obtained from R_0''. Then, replace the parallelograms of the vertices of G_0 in R by the projection representation R_0, and denote the resulting projection representation by R_ℓ.

Remark 1 *Recall that w.l.o.g. all angles of the parallelograms in the projection representation R are distinct [13, 15, 18]. Therefore, since $\varepsilon > 0$ is assumed to be sufficiently small, we can assume w.l.o.g. that, for every vertex $x \in V(G_0)$, the angles ϕ_x are arbitrarily "close" to ϕ_ℓ (and to each other) in R_ℓ. That is, we can assume w.l.o.g. that for every vertex $v \notin V(G_0)$, if $\phi_v > \phi_\ell$ (resp. $\phi_v < \phi_\ell$) in R_ℓ, then also $\phi_v > \phi_x$ (resp. $\phi_v < \phi_x$) in R_ℓ for every vertex $x \in V(G_0)$.*

Remark 2 *Recall that the vertices of G_0 in R_ℓ lie on an ε-squeezed projection representation R_0 with respect to the line segment ℓ, where $\varepsilon > 0$ is a sufficiently (very) small positive number. Therefore, in particular $b_\ell - \varepsilon <_{R_\ell} l(v) \leq_{R_\ell} r(v) <_{R_\ell} b_\ell + \varepsilon$ and $a_\ell - \varepsilon <_{R_\ell} L(v) \leq_{R_\ell} R(v) <_{R_\ell} a_\ell + \varepsilon$ for every vertex $v \in V(G_0)$. On the other hand, since ε has been chosen to be sufficiently small, we may assume w.l.o.g. that for every vertex $z \notin V(G_0)$, the lower right endpoint $r(z)$ (resp. the lower left endpoint $l(z)$) of P_z in R_ℓ does not lie between $b_\ell - \varepsilon$ and $b_\ell + \varepsilon$, i.e. either $r(z) <_{R_\ell} b_\ell - \varepsilon$ or $r(z) >_{R_\ell} b_\ell + \varepsilon$ (resp. either $l(z) <_{R_\ell} b_\ell - \varepsilon$ or $l(z) >_{R_\ell} b_\ell + \varepsilon$). Similarly, for every vertex $z \notin V(G_0)$, the upper right endpoint $R(z)$ (resp. the upper left endpoint $L(z)$) of P_z in R_ℓ does not lie between $a_\ell - \varepsilon$ and $a_\ell + \varepsilon$, i.e. either $R(z) <_{R_\ell} a_\ell - \varepsilon$ or $R(z) >_{R_\ell} a_\ell + \varepsilon$ (resp. either $L(z) <_{R_\ell} a_\ell - \varepsilon$ or $L(z) >_{R_\ell} a_\ell + \varepsilon$).*

4.8 Properties of R_ℓ

Lemma 37 *$R_\ell \setminus \{u\}$ is a projection representation of $G \setminus \{u\}$.*

Proof. Recall that all vertices of $G_0 \setminus \{u\}$ are bounded by Observation 4 and that $N(v) \setminus V(G_0) = N(X_1) \cup \bigcup_{i=1}^{\infty} H_i \cup \bigcup_{i=0}^{\infty} H_i'$ for every vertex $v \in V(G_0) \setminus \{u\}$ by Lemma 36. We will prove that for a vertex $z \in V(G \setminus G_0)$ and a vertex $v \in V(G_0) \setminus \{u\}$, z is adjacent to v in R_ℓ if and only if $z \in N(X_1) \cup \bigcup_{i=1}^{\infty} H_i \cup \bigcup_{i=0}^{\infty} H_i'$.

Consider a vertex $z \in N(X_1) \cup \bigcup_{i=1}^{\infty} H_i \cup \bigcup_{i=0}^{\infty} H_i'$. Then z is a vertex of $G \setminus G_0$ by definition of G_0. Furthermore, z is bounded by Lemma 28. If $z \in \bigcup_{i=1}^{\infty} H_i \cup \bigcup_{i=0}^{\infty} H_i'$, then $z \in N(w) \cap N(x_2)$ by the definition of H. Let $z \in N(X_1)$. Then again $z \in N(x_2)$, since $N_1(x_2) = N = N(X_1)$ by Lemma 20. Furthermore $z \in N(w)$, since $N_1(w) = N(X_1)$ by Lemma 18. That is, $z \in N(w) \cap N(x_2)$ for every case regarding z, and thus P_z intersects both P_w and P_{x_2} in R. Recall now by definition of the line segment ℓ that ℓ lies between P_w and P_{x_2} in R. Therefore, since P_z intersects both P_w and P_{x_2} in R, it follows that also P_z intersects ℓ in R. Thus, z is adjacent in R_ℓ to every vertex $v \in V(G_0) \setminus \{u\}$, since both z and v are bounded.

Conversely, consider a vertex $z \in V(G \setminus G_0)$ and a vertex $v \in V(G_0) \setminus \{u\}$, such that z is adjacent to v in R_ℓ. Then, in particular P_z intersects ℓ in R. Recall that v is bounded by Observation 4. Therefore, either z is bounded or z is unbounded and $\phi_z < \phi_\ell$ (in both R and R_ℓ). Furthermore,

observe that $z \notin X_1$, since $P_x \ll_R P_u$ for every $x \in X_1$, and since P_z intersects ℓ in R. Suppose that $z \in V(\mathcal{B}_1)$, and thus $z \in V \setminus Q_u \setminus N[u] \setminus V_0(u)$ by Observation 3. Then, either $P_u \ll_R P_{x_2} \ll_R P_z$ or $P_z \ll_R P_x \ll_R P_u \ll_R P_{x_2}$ for every $x \in X_1$ by Lemma 21. Thus, P_z does not intersect the line segment ℓ in R, since ℓ lies between P_u and P_{x_2} in R by definition of ℓ, which is a contradiction. Thus, $z \notin V(\mathcal{B}_1)$.

Suppose first that z is bounded, and thus also $z \notin Q_u$. We will prove that $z \in N(X_1) \cup \bigcup_{i=1}^{\infty} H_i \cup \bigcup_{i=0}^{\infty} H'_i$. To this end, we distinguish the cases where $z \in V_0(u)$, $z \in N(u)$, and $z \in V \setminus N[u] \setminus V_0(u)$. Recall by Lemma 17 that $V(C_u \cup C_2 \cup H)$ induces a subgraph of $G \setminus Q_u \setminus N[X_1] \setminus \mathcal{B}_1$ that includes all connected components of $G \setminus Q_u \setminus N[X_1] \setminus \mathcal{B}_1$, in which the vertices of $S_2 \cup \{u\}$ belong. Let first $z \in V \setminus N[u] \setminus V_0(u)$, i.e. $z \in V \setminus Q_u \setminus N[u] \setminus V_0(u)$. Then either $P_u \ll_R P_{x_2} \ll_R P_z$ or $P_z \ll_R P_x \ll_R P_u \ll_R P_{x_2}$ for every $x \in X_1$ by Lemma 21, and thus P_z does not intersect ℓ in R, which is a contradiction. Let now $z \in V_0(u)$; then $z \in S_2$, since P_z intersects ℓ in R (i.e. $P_z \not\ll_R P_u$). Then, since $z \notin X_1 \cup Q_u \cup V(\mathcal{B}_1)$, it follows that either $z \in N(X_1)$ or $z \in V(C_u \cup C_2 \cup H)$. Therefore, since we assumed that $z \notin V(G_0)$, it follows that either $z \in N(X_1)$ or $z \in \bigcup_{i=1}^{\infty} H_i \cup \bigcup_{i=0}^{\infty} H'_i$, i.e. $z \in N(X_1) \cup \bigcup_{i=1}^{\infty} H_i \cup \bigcup_{i=0}^{\infty} H'_i$. Let finally $z \in N(u)$. If $z \notin N(X_1)$, then $z \in V(C_u \cup H)$ by the definition of H and by Lemma 18. That is, either $z \in N(X_1)$ or $z \in V(C_u \cup H)$. Thus, since we assumed that $z \notin V(G_0)$, it follows again that either $z \in N(X_1)$ or $z \in \bigcup_{i=1}^{\infty} H_i \cup \bigcup_{i=0}^{\infty} H'_i$, i.e. $z \in N(X_1) \cup \bigcup_{i=1}^{\infty} H_i \cup \bigcup_{i=0}^{\infty} H'_i$. Summarizing, if z is bounded, then $z \in N(X_1) \cup \bigcup_{i=1}^{\infty} H_i \cup \bigcup_{i=0}^{\infty} H'_i$.

Suppose now that z is unbounded and $\phi_z < \phi_\ell$ (in both R and R_ℓ). Then, $a_\ell <_R L(z)$ and $l(z) <_R b_\ell$. Recall that $z \notin X_1$; furthermore also $z \notin N(X_1)$, since z is unbounded and every vertex of $N = N(X_1)$ is bounded by Lemma 28. Therefore, $z \notin N[X_1]$. We distinguish now in the definition of the line segment ℓ, the cases where $a_\ell <_R L(x_2)$ and $a_\ell =_R L(x_2)$ in R.

Case 1. $a_\ell <_R L(x_2)$. Then $a_\ell =_R L(u) + \Delta$ in R, and thus $\phi_\ell = \phi_u$ in R by definition of the line segment ℓ. Therefore, $\phi_z < \phi_\ell = \phi_u$ in R for some unbounded vertex z, since we assumed that $\phi_z < \phi_\ell$ in R. This is a contradiction, since $\phi_u = \min\{\phi_x \text{ in } R \mid x \in V_U\}$ by our initial assumption on u.

Case 2. $a_\ell =_R L(x_2)$. Recall that $P_w \ll_R P_{x_2}$. Then, $R(w) <_R L(x_2) =_R a_\ell <_R L(z)$ and $l(z) <_R b_\ell =_R r(w) <_R l(x_2)$, since we assumed that $\phi_z < \phi_\ell$. Therefore, P_z intersects both P_w and P_{x_2} in R, while also $\phi_z < \phi_w$ and $\phi_z < \phi_{x_2}$ in R. Thus $z \in N(w) \cap N(x_2)$, since both w and x_2 are bounded. Therefore, since also $z \notin N[X_1]$, it follows that $z \in H$ by definition of H. If $z \in H \setminus \bigcup_{i=1}^{\infty} H_i \setminus \bigcup_{i=0}^{\infty} H'_i$, then $z \in V(G_0)$, which is a contradiction. Therefore, $z \in \bigcup_{i=1}^{\infty} H_i \setminus \bigcup_{i=0}^{\infty} H'_i$.

Summarizing, if z is adjacent to v in R_ℓ for a vertex $z \in V(G \setminus G_0)$ and a vertex $v \in V(G_0) \setminus \{u\}$, then $z \in N(X_1) \cup \bigcup_{i=1}^{\infty} H_i \cup \bigcup_{i=0}^{\infty} H'_i$. This completes the proof of the lemma. ■

Corollary 4 *For every $z \in N(u)$, P_z intersects P_u in R_ℓ.*

Proof. If $z \in V(G_0)$, then P_z intersects P_u in R_0, since R_0 is a projection representation of G_0. Therefore, P_z intersects P_u also in R_ℓ, since R_0 is a sub-representation of R_ℓ. Suppose now that $z \notin V(G_0)$. Then, either $z \in N(X_1)$ or $z \in V(C_u \cup H)$, since we assumed that $z \in N(u)$. Thus, either $z \in N(X_1)$ or $z \in \bigcup_{i=1}^{\infty} H_i \cup \bigcup_{i=0}^{\infty} H'_i$, since $z \notin V(G_0)$, and thus z is adjacent to every vertex v of $G_0 \setminus \{u\}$ by Lemma 36. Therefore, P_z intersects the line segment ℓ in both R and R_ℓ (cf. the proof of Lemma 37), and thus in particular P_z intersects also P_u in R_ℓ. ■

Note that, since the position and the angle of P_u is not the same in R and in R_ℓ, the projection representation R_ℓ may be *not* a projection representation of G. Similarly to the Transformations 1, 2, and 3 in the proof of Theorem 1, we define in the following the Transformations 4, 5, and 6. After applying these transformations to R_ℓ, we obtain eventually a projection representation R^* of G with $k-1$ unbounded vertices. The following lemma will be mainly used in the remaining part of the proof of Theorem 2.

Lemma 38 *u has the right border property in R_ℓ.*

Proof. Recall first that u has the right border property in R_0. Suppose for the sake of contradiction that u has not the right border property in R_ℓ. Then, there exist vertices $z \in N(u)$ and $y \in V_0(u)$,

such that $P_z \ll_{R_\ell} P_y$. We will now prove that $b_u <_{R_\ell} r(z)$ for the lower right endpoint $r(z)$ of every $z \in N(u)$. If $z \in V(G_0)$, then clearly $b_u <_{R_\ell} r(z)$, since $b_u < b_\ell$ and R_0 is an ε-squeezed projection representation of G_0 with respect to ℓ, where $\varepsilon > 0$ is sufficiently small. If $z \notin V(G_0)$, then $b_u = r(u) <_R r(z)$ in R by Lemma 1, and thus also $b_u <_{R_\ell} r(z)$, since the endpoints of P_z remain the same in both R and R_ℓ. That is, $b_u <_{R_\ell} r(z)$ for every $z \in N(u)$.

Case 1. Let first $z \in V(G_0)$. Then, $y \notin V(G_0)$, since u has the right border property in R_0. Furthermore $b_u <_{R_\ell} r(z) <_{R_\ell} r(y)$, since $P_z \ll_{R_\ell} P_y$. Therefore, since $y \notin V(G_0)$, i.e. since the endpoints of P_y remain the same in both R and R_ℓ, it follows that also $b_u <_R r(y)$. Thus $y \in S_2$, since we assumed that $y \in V_0(u)$; therefore in particular $y \notin X_1$, since $X_1 \subseteq D_1$ by Lemma 18. Furthermore, $y \notin Q_u$ by Lemma 14 and $y \notin V(\mathcal{B}_1)$ by definition of $\mathcal{B}_1$, since $y \in V_0(u)$. Recall now by Lemma 17 that $V(C_u \cup C_2 \cup H)$ induces a subgraph of $G \setminus Q_u \setminus N[X_1] \setminus \mathcal{B}_1$ that includes all connected components of $G \setminus Q_u \setminus N[X_1] \setminus \mathcal{B}_1$, in which the vertices of $S_2 \cup \{u\}$ belong. Therefore, since $y \in S_2$ and $y \notin Q_u \cup X_1 \cup V(\mathcal{B}_1)$, it follows that $y \in N(X_1) \cup V(C_u \cup C_2 \cup H)$. Thus $y \in N(X_1) \cup \bigcup_{i=1}^{\infty} H_i \cup \bigcup_{i=0}^{\infty} H'_i$, since otherwise $y \in V(G_0)$, which is a contradiction. Therefore, y is adjacent to every vertex $v \in V(G_0) \setminus \{u\}$ by Lemma 36. Thus, in particular, P_y intersects P_z in R_ℓ, since $z \in V(G_0) \setminus \{u\}$ and $R_\ell \setminus \{u\}$ is a projection representation of $G \setminus \{u\}$ by Lemma 37. This is a contradiction, since we assumed that $P_z \ll_{R_\ell} P_y$.

Case 2. Let now $z \notin V(G_0)$. Since we assumed that $z \in N(u)$, it follows that either $z \in N(X_1)$ or $z \in V(C_u \cup H)$. Therefore, either $z \in N(X_1)$ or $z \in \bigcup_{i=1}^{\infty} H_i \cup \bigcup_{i=0}^{\infty} H'_i$, since $z \notin V(G_0)$, and thus z is adjacent to every vertex $v \in V(G_0) \setminus \{u\}$ by Lemma 36. Then, in particular, P_z intersects P_v in R_ℓ, for every vertex $v \in V(G_0) \setminus \{u\}$, and thus $y \notin V(G_0)$, since we assumed that $P_z \ll_{R_\ell} P_y$. Therefore, since both $y, z \notin V(G_0)$ and $P_z \ll_{R_\ell} P_y$, it follows that also $P_z \ll_R P_y$, and thus in particular $b_u <_R r(z) <_R r(y)$ by Lemma 1. Thus $y \in S_2$, since we assumed that $y \in V_0(u)$; therefore in particular $y \notin X_1$, since $X_1 \subseteq D_1$ by Lemma 18. Furthermore, $y \notin Q_u$ by Lemma 14 and $y \notin V(\mathcal{B}_1)$ by definition of $\mathcal{B}_1$, since $y \in V_0(u)$. Therefore, since $y \in S_2$ and $y \notin Q_u \cup X_1 \cup V(\mathcal{B}_1)$, it follows (similarly to the previous paragraph) that $y \in N(X_1) \cup V(C_u \cup C_2 \cup H)$. Thus $y \in N(X_1) \cup \bigcup_{i=1}^{\infty} H_i \cup \bigcup_{i=0}^{\infty} H'_i$, since otherwise $y \in V(G_0)$, which is a contradiction.

Suppose that $y \in N(X_1)$, i.e. $y \in N(x)$ for some $x \in X_1$. Recall that $P_x \ll_R P_u$, since $X_1 \subseteq D_1$ by Lemma 18. If $P_u \ll_R P_y$, then $P_x \ll_R P_u \ll_R P_y$, i.e. $y \notin N(x)$, which is a contradiction. Thus $P_u \not\ll_R P_y$, i.e. either P_y intersects P_u in R or $P_y \ll_R P_u$. Suppose that P_y intersects P_u in R, and thus either $N(y) \subseteq N(u)$ or $N(u) \subseteq N(y)$ by Lemma 3, since $y \notin N(u)$. If $N(y) \subseteq N(u)$, then $x \in N(u)$, where $x \in X_1$, which is a contradiction. If $N(u) \subseteq N(y)$, then $z \in N(y)$, which is a contradiction, since we assumed that $P_z \ll_{R_\ell} P_y$. Therefore, P_y does not intersect P_u in R, and thus $P_y \ll_R P_u$, i.e. $P_z \ll_R P_y \ll_R P_u$. Then $z \notin N(u)$, which is a contradiction. Therefore, $y \notin N(X_1)$, and thus $y \in \bigcup_{i=1}^{\infty} H_i \cup \bigcup_{i=0}^{\infty} H'_i$. On the other hand $y \notin \bigcup_{i=0}^{\infty} H'_i$, since otherwise $y \in N(u)$ by Lemma 33, which is a contradiction. Thus $y \in \bigcup_{i=1}^{\infty} H_i$. Summarizing, $z \notin V(G_0)$ and $y = v_i \in H_i$ for some $i \geq 1$.

We will now prove by induction on i that $v_i \in N(u)$ or $P_z \not\ll_R P_{v_i}$, for every vertex $v_i \in H_i$, $i \geq 1$. This then completes the proof of the lemma, since $v_i = y \notin N(u)$ (by the assumption that $y \in V_0(u)$), and thus $P_z \not\ll_R P_{v_i} = P_y$, which is a contradiction (since we assumed that $P_z \ll_{R_\ell} P_y$, and thus also $P_z \ll_R P_y$).

For the sake of contradiction, suppose that $v_i \notin N(u)$ and $P_z \ll_R P_{v_i}$ for some $i \geq 1$. Then, note that $z \notin N(v_i)$. Recall that $v_i \in N(x_2)$ due to the definition of H, and since $v_i \in H$. Therefore, since $v_i \notin N(u)$ and $x_2 \in V_0(u)$, it follows that $v_i \in V_0(u)$, and thus $T_{v_i} \ll_{R_T} T_u$ in the trapezoid representation R_T. Therefore, also $T_{v_i} \ll_{R_T} T_z$, since $z \in N(u) \setminus N(v_i)$. Recall now that $T_x \ll_{R_T} T_{x_2}$ for every $x \in X_1$ by Lemma 19. Thus, since $v_i \in N(x_2)$ and $v_i \notin N(X_1)$ by definition of H, it follows that $T_x \ll_{R_T} T_{v_i}$ for every $x \in X_1$, i.e. $T_x \ll_{R_T} T_{v_i} \ll_{R_T} T_z$ for every $x \in X_1$. Thus, in particular, $z \notin N(X_1)$.

For the induction basis, let $i = 1$. Suppose that $N_1(z) = N$. Then, for every $v \in N$, T_v intersects T_{v_1} in R_T, i.e. $v \in N(v_1)$, since $v \in N(X_1) \cap N(z)$ and $T_x \ll_{R_T} T_{v_1} \ll_{R_T} T_z$ for every $x \in X_1$. Thus, $N_1(v_1) = N$, i.e. $N = H_0 \subseteq N(v_1)$, which is a contradiction by Definition 8, since $v_1 \in H_1$.

Therefore $N_1(z) \neq N$, and thus there exists a vertex $v \in N \setminus N(z)$, i.e. $v \in N(x) \setminus N(z)$ for some $x \in X_1$. Then $v \in N(x_2)$, since $N_1(x_2) = N = N(X_1)$ by Lemma 20. Thus, since $v \in N(x) \cap N(x_2)$

and $P_x \ll_R P_u \ll_R P_{x_2}$, it follows that P_v intersects P_u in R. If $v \notin N(u)$, then either $N(v) \subseteq N(u)$ or $N(u) \subseteq N(v)$ by Lemma 3. If $N(v) \subseteq N(u)$, then $x_2 \in N(u)$, which is a contradiction. If $N(u) \subseteq N(v)$, then $z \in N(v)$, which is again a contradiction. Therefore, $v \in N(u)$ for all vertices $v \in N \setminus N(z)$.

Consider now the trapezoid representation R_T. Recall that $T_x \ll_{R_T} T_{v_1} \ll_{R_T} T_u$ and $T_x \ll_{R_T} T_{v_1} \ll_{R_T} T_z$ for every $x \in X_1$. Consider an arbitrary vertex $v \in N = N(X_1)$. If $v \in N(z)$, then T_v intersects T_{v_1} in R_T, since $v \in N(X_1) \cap N(z)$ and $T_x \ll_{R_T} T_{v_1} \ll_{R_T} T_z$ for every $x \in X_1$; therefore $v \in N(v_1)$. Otherwise, if $v \notin N(z)$, then $v \in N(u)$, as we proved in the previous paragraph. Then, T_v intersects T_{v_1} in R_T, since $v \in N(X_1) \cap N(u)$ and $T_x \ll_{R_T} T_{v_1} \ll_{R_T} T_u$ for every $x \in X_1$; therefore again $v \in N(v_1)$. Thus, $v \in N(v_1)$ for every $v \in N$, i.e. $N = H_0 \subseteq N(v_1)$, which is a contradiction by Definition 8, since $v_1 \in H_1$. Therefore, $v_1 \in N(u)$ or $P_z \not\ll_R P_{v_1}$ for every vertex $v_1 \in H_1$. This proves the induction basis.

For the induction step, let $i \geq 2$. Let $(v_0, v_1, \ldots, v_{i-2}, v_{i-1}, v_i)$ be an H_i-chain of v_i. By the induction hypothesis, $v_{i-1} \in N(u)$ or $P_z \not\ll_R P_{v_{i-1}}$. Recall that $T_{v_i} \ll_{R_T} T_z$, as we proved above. Assume that $z \in N(v_{i-1})$. Then, since $z \in N(v_{i-1}) \setminus N(v_i)$ and $v_{i-2} \in N(v_i) \setminus N(v_{i-1})$, P_{v_i} does not intersect $P_{v_{i-1}}$ in R by Lemma 3. Suppose first that i is even. Then, $P_{v_{i-2}} \ll_R P_{v_{i-1}}$ by Lemmas 26 and 27. Thus, since $v_i \in N(v_{i-2})$ and P_{v_i} does not intersect $P_{v_{i-1}}$ in R, it follows that $P_{v_i} \ll_R P_{v_{i-1}}$. Then, since we assumed that $P_z \ll_R P_{v_i}$, it follows that $P_z \ll_R P_{v_i} \ll_R P_{v_{i-1}}$, i.e. $z \notin N(v_{i-1})$. This is a contradiction to the assumption that $z \in N(v_{i-1})$. Suppose now that i is odd, i.e. $i \geq 3$. Then, $T_{v_{i-1}} \ll_{R_T} T_{v_{i-2}}$ by Lemma 27. Thus, since $v_i \in N(v_{i-2}) \setminus N(v_{i-1})$, it follows that $T_{v_{i-1}} \ll_{R_T} T_{v_i}$. Then, since $T_{v_i} \ll_{R_T} T_z$, it follows that $T_{v_{i-1}} \ll_{R_T} T_{v_i} \ll_{R_T} T_z$, i.e. $z \notin N(v_{i-1})$. This is again a contradiction to the assumption that $z \in N(v_{i-1})$.

Therefore $z \notin N(v_{i-1})$. Recall that v_{i-1} is a bounded vertex by Lemma 28. Furthermore, z is a bounded vertex, since $z \in N(u)$. Therefore, since $z \notin N(v_{i-1})$, it follows that $P_{v_{i-1}}$ does not intersect P_z in R, i.e. either $P_{v_{i-1}} \ll_R P_z$ or $P_z \ll_R P_{v_{i-1}}$.

Case 2a. $P_{v_{i-1}} \ll_R P_z$. Then, since $z \in N(u)$ and $P_u \ll_R P_{x_2}$, it follows by Lemma 1 that $R(v_{i-1}) <_R L(z) <_R L(u) <_R L(x_2)$, i.e. $R(v_{i-1}) <_R L(x_2)$. Thus, since $v_{i-1} \in N(x_2)$ and $P_u \ll_R P_{x_2}$, it follows that $r(u) <_R l(x_2) <_R r(v_{i-1})$. That is, $R(v_{i-1}) <_R L(u) = R(u)$ and $r(u) <_R r(v_{i-1})$, i.e. $P_{v_{i-1}}$ intersects P_u in R and $\phi_{v_{i-1}} > \phi_u$. If $v_{i-1} \notin N(u)$, then $N(v_{i-1}) \subseteq N(u)$ by Lemma 3, and thus $x_2 \in N(u)$, which is a contradiction. Thus, $v_{i-1} \in N(u)$.

Since $P_{v_{i-1}} \ll_R P_z$ and $P_z \ll_R P_{v_i}$ by assumption, it follows that $P_{v_{i-1}} \ll_R P_{v_i}$. Recall by Lemmas 26 and 27 that either $P_{v_{i-2}} \ll_R P_{v_{i-1}}$ or $P_{v_{i-1}} \ll_R P_{v_{i-2}}$. If $P_{v_{i-2}} \ll_R P_{v_{i-1}}$, then $P_{v_{i-2}} \ll_R P_{v_{i-1}} \ll_R P_{v_i}$, i.e. $v_{i-2}v_i \notin E$, which is a contradiction. Therefore, $P_{v_{i-1}} \ll_R P_{v_{i-2}}$ and i is odd, and thus $T_{v_{i-1}} \ll_{R_T} T_{v_{i-2}}$ by Lemmas 26 and 27. Thus, since $v_i \in N(v_{i-2}) \setminus N(v_{i-1})$, it follows that also $T_{v_{i-1}} \ll_{R_T} T_{v_i}$. Recall now that $T_{v_i} \ll_{R_T} T_u$, as we proved above. Therefore, it follows that $T_{v_{i-1}} \ll_{R_T} T_{v_i} \ll_{R_T} T_u$, and thus $v_{i-1} \notin N(u)$, which is a contradiction by the previous paragraph.

Case 2b. $P_z \ll_R P_{v_{i-1}}$. Then, $v_{i-1} \in N(u)$ by the induction hypothesis, and thus v_{i-1} is bounded. Furthermore, v_i is also bounded by Lemma 28, since $v_i \in H$. Therefore, P_{v_i} does not intersect $P_{v_{i-1}}$ in R, since $v_{i-1}v_i \notin E$, and thus either $P_{v_i} \ll_R P_{v_{i-1}}$ or $P_{v_{i-1}} \ll_R P_{v_i}$. Recall that $v_i \notin N(u)$ and $P_z \ll_R P_{v_i}$ by assumption. Suppose first that $P_{v_i} \ll_R P_{v_{i-1}}$, that is, $P_z \ll_R P_{v_i} \ll_R P_{v_{i-1}}$. Then, since $z \in N(u)$ and $v_{i-1} \in N(u)$, it follows that P_u intersects P_{v_i} in R. Since $v_i \notin N(u)$, either $N(v_i) \subseteq N(u)$ or $N(u) \subseteq N(v_i)$ by Lemma 3. If $N(v_i) \subseteq N(u)$, then $x_2 \in N(u)$, which is a contradiction. If $N(u) \subseteq N(v_i)$, then $v_{i-1} \in N(v_i)$, which is again a contradiction.

Suppose now that $P_{v_{i-1}} \ll_R P_{v_i}$. Recall by Lemmas 26 and 27 that either $P_{v_{i-2}} \ll_R P_{v_{i-1}}$ or $P_{v_{i-1}} \ll_R P_{v_{i-2}}$. If $P_{v_{i-2}} \ll_R P_{v_{i-1}}$, then $P_{v_{i-2}} \ll_R P_{v_{i-1}} \ll_R P_{v_i}$, i.e. $v_{i-2}v_i \notin E$, which is a contradiction. Therefore, $P_{v_{i-1}} \ll_R P_{v_{i-2}}$ and i is odd, and thus $T_{v_{i-1}} \ll_{R_T} T_{v_{i-2}}$ by Lemmas 26 and 27. Thus, since $v_i \in N(v_{i-2}) \setminus N(v_{i-1})$, it follows that also $T_{v_{i-1}} \ll_{R_T} T_{v_i}$. Recall now that $T_{v_i} \ll_{R_T} T_u$, as we proved above. Therefore, $T_{v_{i-1}} \ll_{R_T} T_{v_i} \ll_{R_T} T_u$, and thus $v_{i-1} \notin N(u)$, which is a contradiction. This completes the induction step and the lemma follows. ■

4.9 The projection representations R'_ℓ, R''_ℓ, and R'''_ℓ

Notation 1 *In the following, whenever we refer to $N(u)$, we will mean $N_G(u)$, i.e. the neighborhood set of vertex u in G. Note that, since R_ℓ may be* not *a projection representation of G (although $R_\ell \setminus \{u\}$ is a projection representation of $G \setminus \{u\}$ by Lemma 37), the set $N_G(u)$ does not coincide necessarily with the set of adjacent vertices of u in the graph induced by R_ℓ.*

Similarly to the proof of Theorem 1, we add to G an isolated bounded vertex t. This isolated vertex t corresponds to a parallelogram P_t, such that $P_v \ll_R P_t$ and $P_v \ll_{R_\ell} P_t$ for every other vertex v of G. Denote by V_B and V_U the set of bounded and unbounded vertices of G in R_ℓ, after the addition of the auxiliary vertex t to G (note that $t \in V_B$).

Now, we define for every $z \in N(u)$ the value $L_0(z) = \min_{R_\ell}\{L(x) \mid x \in V_B \setminus N(u), P_z \ll_{R_\ell} P_x\}$. For every vertex $x \in V_B \setminus N(u)$, such that $P_z \ll_{R_\ell} P_x$ for some $z \in N(u)$, it follows that $x \notin V_0(u)$, since u has the right border property in R_ℓ by Lemma 38. Thus, for every $z \in N(u)$, $L_0(z) = \min_{R_\ell}\{L(x) \mid x \in V_B \setminus N(u) \setminus V_0(u), P_z \ll_{R_\ell} P_x\}$. Note that the value $L_0(z)$ is well defined for every $z \in N(u)$, since in particular $t \in V_B \setminus N(u)$ and $P_z \ll_{R_\ell} P_t$. Furthermore, note that for every every $z \in N(u)$, the endpoint $L_0(z)$ does not correspond to any vertex of G_0, since $V(G_0) \subseteq N[u] \cup V_0(u)$ by Observation 4. Define now the the value $\ell_0 = \max_{R_\ell}\{l(x) \mid x \in V_0(u)\}$ and the subset $N_1 = \{z \in N(u) \mid r(z) <_{R_\ell} \ell_0\}$ of neighbors of u (in G, and not in R_ℓ). Similarly to Transformation 1 in the proof of Theorem 1, we construct now the projection representation R'_ℓ from R_ℓ as follows.

Transformation 4 *For every $z \in N_1$, move the right line of P_z parallel to the right, until either $r(z)$ comes immediately after ℓ_0 on L_2, or $R(z)$ comes immediately before $L_0(z)$ on L_1. Denote the resulting projection representation by R'_ℓ.*

Remark 3 *Suppose now that the endpoint ℓ_0 corresponds to a vertex of $V(G_0)$, i.e. $b_\ell - \varepsilon <_{R_\ell} \ell_0 <_{R_\ell} b_\ell + \varepsilon$ by Remark 2. Then, since ε has been chosen to be sufficiently small, we make w.l.o.g. the following convention in the statement of Transformation 4: for every vertex $z \in N_1$, such that $z \notin V(G_0)$, either $r(z) <_{R'_\ell} b_\ell - \varepsilon$ (in the case where $r(z) <_{R'_\ell} \ell_0$) or $r(z)$ comes immediately after $b_\ell + \varepsilon$ on L_2, i.e. $r(z) >_{R'_\ell} b_\ell + \varepsilon$ (in the case where $r(z) >_{R'_\ell} \ell_0$). Summarizing, similarly to R_ℓ, we may assume in R'_ℓ w.l.o.g. that for every vertex $z \in N(u)$, such that $z \notin V(G_0)$, either $r(z) <_{R'_\ell} b_\ell - \varepsilon$ or $r(z) >_{R'_\ell} b_\ell + \varepsilon$.*

Note that the left lines of all parallelograms do not move during Transformation 4. Thus, in particular, the value of ℓ_0 is the same in R_ℓ and in R'_ℓ, i.e. $\ell_0 = \max_{R'_\ell}\{l(x) \mid x \in V_0(u)\}$. As we will prove in Lemma 41, the representation $R'_\ell \setminus \{u\}$ is a projection representation of the graph $G \setminus \{u\}$, and thus the parallelograms of two bounded vertices intersect in R_ℓ if and only if they intersect also in R'_ℓ. Therefore, for every $z \in N(u)$, the value $L_0(z)$ remains the same in R_ℓ and in R'_ℓ, i.e. $L_0(z) = \min_{R'_\ell}\{L(x) \mid x \in V_B \setminus N(u) \setminus V_0(u), P_z \ll_{R'_\ell} P_x\}$ for every $z \in N(u)$. Similarly to the proof of Theorem 1, we define now the subset $N_2 = \{z \in N(u) \mid \ell_0 <_{R'_\ell} r(z)\}$ of neighbors of u. Since the lower right endpoint $r(z)$ of all parallelograms P_z in R'_ℓ is greater than or equal to the corresponding value $r(z)$ in R_ℓ, it follows that $N(u) \setminus N_1 = \{z \in N(u) \mid \ell_0 <_{R_\ell} r(z)\} \subseteq \{z \in N(u) \mid \ell_0 <_{R'_\ell} r(z)\} = N_2$. Thus, $N(u) \setminus N_2 \subseteq N_1$ and $N_2 \cup (N_1 \setminus N_2) = N(u)$. If $N_2 \neq \emptyset$, we define the value $r_0 = \min_{R'_\ell}\{r(z) \mid z \in N_2\}$.

Lemma 39 *If $N_2 \neq \emptyset$, i.e. if the value r_0 can be defined, then $r(u) <_{R'_\ell} r_0$.*

Proof. Denote by z_0 the vertex of N_2, such that $r_0 = r(z_0)$. Let first $z_0 \in V(G_0)$. Then $r(z_0) >_{R_0} r(u)$ by Lemma 1, since $N_2 \subseteq N(u)$, and since R_0 is a projection representation of G_0. Thus, also $r(z_0) >_{R_\ell} r(u)$, since R_0 is a sub-representation of R_ℓ. Furthermore, $r_0 = r(z_0) >_{R'_\ell} r(u)$, since the lower right endpoints $r(z)$ do not decrease by Transformation 4. Let now $z_0 \notin V(G_0)$. Then, either $r(z_0) <_{R'_\ell} b_\ell - \varepsilon$ or $r(z_0) >_{R'_\ell} b_\ell + \varepsilon$ by Remark 3. Recall that $x_2 \in V(G_0)$, and thus $b_\ell - \varepsilon <_{R_\ell} l(x_2) <_{R_\ell} b_\ell + \varepsilon$ by Remark 2. Thus, since also $x_2 \in V_0(u)$, it follows by definition of ℓ_0

that $b_\ell - \varepsilon <_{R_\ell} l(x_2) \leq_{R_\ell} \ell_0$. Therefore $b_\ell - \varepsilon <_{R'_\ell} \ell_0 <_{R'_\ell} r(z_0)$, since $z_0 \in N_2$. Thus $r(z_0) >_{R'_\ell} b_\ell + \varepsilon$ by Remark 3 (since $z_0 \notin V(G_0)$), i.e. $r(z_0) >_{R'_\ell} b_\ell + \varepsilon >_{R'_\ell} r(u)$. Summarizing, $r_0 = r(z_0) >_{R'_\ell} r(u)$ in all cases. ■

Define now the value $L_0 = \min_{R_\ell}\{L(x) \mid x \in V_B \setminus N(u) \setminus V_0(u), P_u \ll_{R_\ell} P_x\}$; again, L_0 is well defined, since in particular $t \in V_B \setminus N(u) \setminus V_0(u)$ and $P_u \ll_{R_\ell} P_t$. Then, since by Transformation 4 only some endpoints of vertices $z \in N(u)$ are moved, it follows that the value L_0 does not change in R'_ℓ, i.e. $L_0 = \min_{R'_\ell}\{L(x) \mid x \in V_B \setminus N(u) \setminus V_0(u), P_u \ll_{R'_\ell} P_x\}$. The following property of the projection representation R'_ℓ can be obtained easily by Transformation 4.

Lemma 40 *For all vertices $z \in N_1 \setminus N_2$, for which $R(z) <_{R'_\ell} L_0$, the values $R(z)$ lie immediately before L_0 in R'_ℓ.*

Proof. Let $z \in N_1 \setminus N_2$. By definition of the sets N_1 and N_2, it follows that $r(z) <_{R_\ell} \ell_0$ and $r(z) <_{R'_\ell} \ell_0$ in both R_ℓ and R'_ℓ. Thus, $R(z)$ comes immediately before $L_0(z)$ in R'_ℓ during Transformation 4. We will now prove that $L_0 \leq_{R_\ell} L_0(z)$. Consider a vertex $x \in V_B \setminus N(u) \setminus V_0(u)$, such that $P_z \ll_{R_\ell} P_x$, i.e. $r(z) <_{R_\ell} l(x)$ and $R(z) <_{R_\ell} L(x)$. Then, in particular $x \notin V(G_0)$, since $x \notin N(u) \cup V_0(u)$ and $V(G_0) \subseteq N[u] \cup V_0(u)$ by Observation 4. Suppose that P_x intersects P_u in R_ℓ, i.e. P_x intersects the line segment ℓ in R_ℓ. Then, in particular P_x intersects also P_{x_2} in R_ℓ, since $x_2 \in V(G_0)$, and thus $x \in N(x_2)$, since both x and x_2 are bounded in R_ℓ. Therefore $x \in V_0(u)$, since $x_2 \in V_0(u)$ and $x \notin N(u)$, which is a contradiction. Thus, P_x does not intersect P_u in R_ℓ, i.e. either $P_x \ll_{R_\ell} P_u$ or $P_u \ll_{R_\ell} P_x$. If $P_x \ll_{R_\ell} P_u$, then $P_z \ll_{R_\ell} P_x \ll_{R_\ell} P_u$, which is a contradiction, since P_z intersects P_u in R_ℓ by Corollary 4. Therefore, $P_u \ll_{R_\ell} P_x$. That is, for every $x \in V_B \setminus N(u) \setminus V_0(u)$, for which $P_z \ll_{R_\ell} P_x$, it follows that also $P_u \ll_{R_\ell} P_x$. Thus, it follows by the definitions of L_0 and of $L_0(z)$ that $L_0 \leq_{R_\ell} L_0(z)$.

Furthermore, also $L_0 \leq_{R'_\ell} L_0(z)$ in R'_ℓ, since by Transformation 4 only some endpoints of vertices $z \in N(u)$ are moved. Therefore, since $R(z)$ comes immediately before $L_0(z)$ in R'_ℓ during Transformation 4, it follows that either $R(z)$ comes immediately before L_0 in R'_ℓ during Transformation 4 (in the case where $L_0 =_{R'_\ell} L_0(z)$) or $R(z) >_{R'_\ell} L_0$ (in the case where $L_0 <_{R'_\ell} L_0(z)$). ■

If $N_2 = \emptyset$, then we set $R''_\ell = R'_\ell$; otherwise, if $N_2 \neq \emptyset$, we construct the projection representation R''_ℓ from R'_ℓ as follows.

Transformation 5 *For every $v \in V_0(u) \cap V_B$, such that $r(v) >_{R'_\ell} r_0$, we move the right line of P_v in R'_ℓ to the left, such that $r(v)$ comes immediately before r_0 in L_2. Denote the resulting projection representation by R''_ℓ.*

Since by Transformation 5 only some endpoints of vertices $v \in V_0(u) \cap V_B$ are moved, it follows that the value L_0 does not change in R''_ℓ, i.e. $L_0 = \min_{R''_\ell}\{L(x) \mid x \in V_B \setminus N(u) \setminus V_0(u), P_u \ll_{R''_\ell} P_x\}$. The next property of the projection representation R''_ℓ follows by Lemma 40.

Corollary 5 *For all vertices $z \in N_1 \setminus N_2$, for which $R(z) <_{R''_\ell} L_0$, the values $R(z)$ lie immediately before L_0 in R''_ℓ.*

Proof. Let x_0 be the vertex of $V_B \setminus N(u) \setminus V_0(u)$, such that $L_0 = L(x_0)$. Recall by Lemma 40 that for all vertices $z \in N_1 \setminus N_2$, for which $R(z) <_{R'_\ell} L_0$, the values $R(z)$ lie immediately before L_0 in R'_ℓ. Furthermore, note that the parallelograms of all neighbors $z \in N(u)$ of u do not move by Transformation 5. Therefore, since also the value L_0 is the same in both R'_ℓ and R''_ℓ, it suffices to prove that there do not exist vertices $v \in V_0(u) \cap V_B$ and $z \in N_1 \setminus N_2$, such that $R(z) <_{R''_\ell} R(v) <_{R''_\ell} L_0$ in R''_ℓ. Suppose otherwise that $R(z) <_{R''_\ell} R(v) <_{R''_\ell} L_0 = L(x_0)$ for two vertices $v \in V_0(u) \cap V_B$ and $z \in N_1 \setminus N_2$. Thus, since only the right lines of some parallelograms P_v, where $v \in V_0(u) \cap V_B$, are moved to the left by Transformation 5, it follows that $R(z) <_{R'_\ell} L_0 = L(x_0) <_{R'_\ell} R(v)$ in R'_ℓ. Therefore, in particular P_v intersects P_{x_0} in R'_ℓ, and thus $v \in N(x_0)$, since both v and x_0 are bounded.

Thus $x_0 \in V_0(u)$, since also $v \in V_0(u)$. This is a contradiction, since $x_0 \in V_B \setminus N(u) \setminus V_0(u)$. This completes the proof. ■

We construct now the projection representation R_ℓ''' from R_ℓ'' as follows.

Transformation 6 *Move the line P_u in R_ℓ'', such that its upper endpoint $L(u) = R(u)$ comes immediately before $\min_{R_\ell''}\{L_0, R(z) \mid z \in N_1 \setminus N_2\}$ and its lower endpoint $l(u) = r(u)$ comes immediately after $\max_{R_\ell''}\{r(v) \mid v \in V_0(u) \cap V_B\}$. Finally, make u a bounded vertex. Denote the resulting projection representation by R_ℓ'''.*

Note by the statement of Transformation 6 that R_ℓ''' is a projection representation with $k-1$ unbounded vertices, since u is a bounded vertex in R_ℓ'''.

4.10 Properties of R_ℓ', R_ℓ'', and R_ℓ'''

In the following (in Lemmas 41, 42), we prove that the projection representations $R_\ell' \setminus \{u\}$ and $R_\ell'' \setminus \{u\}$ (constructed by Transformations 4 and 5, respectively) are both projection representations of $G \setminus \{u\}$. Furthermore, we prove in Lemma 43 that R_ℓ''' is a projection representation of G; that is, $R^* = R_\ell'''$ is a projection representation of G with $k-1$ unbounded vertices, as Theorem 2 states.

Lemma 41 *$R_\ell' \setminus \{u\}$ is a projection representation of $G \setminus \{u\}$.*

Proof. Denote by x_0 the vertex of $V_0(u)$, such that $\ell_0 = l(x_0)$. Since we move the right line of some parallelograms to the right, i.e. we increase some parallelograms, all adjacencies of R_ℓ are kept in R_ℓ'. Suppose that R_ℓ' has the new adjacency zv that is not an adjacency in R_ℓ, for some $z \in N_1$. Therefore, since perform parallel movements of lines, i.e. since every angle ϕ_x in R_ℓ' equals the value of ϕ_x in R_ℓ for every vertex x of G, it follows that $P_z \ll_{R_\ell} P_v$ and P_z intersects P_v in R_ℓ'. Thus, $v \notin V_0(u)$, since u has the right border property in R_ℓ by Lemma 38. Furthermore, $r(z) <_{R_\ell} \ell_0 = l(x_0)$, since $z \in N_1$. However, since $x_0 \in V_0(u)$, and since u has the right border property in R_ℓ, it follows that P_z intersects P_{x_0} in R_ℓ, and thus $L(x_0) <_{R_\ell} R(z)$. We distinguish in the following the cases where $v \notin N(u)$ and $v \in N(u)$.

Case 1. $v \notin N(u)$. Then, since also $v \notin V_0(u)$, it follows by Observation 4 that $v \notin V(G_0)$. We will derive a contradiction to the assumption that R_ℓ' has the new adjacency zv that is not an adjacency in R_ℓ, for some $z \in N_1$. Recall that every angle ϕ_x in R_ℓ' equals the value of ϕ_x in R_ℓ for every vertex x of G. Suppose first that $r(z) <_{R_\ell'} l(v)$. Then, since P_z intersects P_v in R_ℓ', it follows that $L(v) <_{R_\ell'} R(z)$, and thus $\phi_v > \phi_z$ in R_ℓ'. If v is unbounded, then z is not adjacent to v in R_ℓ', which is a contradiction to the assumption. Thus v is bounded, i.e. $v \in V_B \setminus N(u)$ and $P_z \ll_{R_\ell} P_v$, and thus $L_0(z) \leq_{R_\ell} L(v)$ by definition of $L_0(z)$. Furthermore, since all left lines of the parallelograms in R_ℓ do not move during Transformation 4, it follows that also $L_0(z) \leq_{R_\ell'} L(v)$. Thus, $R(z) <_{R_\ell'} L_0(z) \leq_{R_\ell'} L(v)$ by the statement of Transformation 4, which is a contradiction, since $L(v) <_{R_\ell'} R(z)$.

Suppose now that $l(v) <_{R_\ell'} r(z)$. We will first prove that in this case $l(v) <_{R_\ell} l(x_0)$. Suppose otherwise that $l(x_0) <_{R_\ell} l(v)$. Let $x_0 \notin V(G_0)$. Then, since $r(z)$ comes in R_ℓ' at most immediately after $\ell_0 = l(x_0)$ on L_2, it follows that $l(x_0) <_{R_\ell'} r(z) <_{R_\ell'} l(v)$. This is a contradiction to the assumption that $l(v) <_{R_\ell'} r(z)$. Let $x_0 \in V(G_0)$. Then, $b_\ell - \varepsilon <_{R_\ell} l(x_0) <_{R_\ell} b_\ell + \varepsilon$ by Remark 2. Furthermore, since $v \notin V(G_0)$, and since we assumed that $l(x_0) <_{R_\ell} l(v)$, it follows that $l(x_0) <_{R_\ell} b_\ell + \varepsilon <_{R_\ell} l(v)$ by Remark 2. If $z \in V(G_0)$, then $r(z)$ comes in R_ℓ' (due to the statement of Transformation 4) at most immediately after $\ell_0 = l(x_0)$ on L_2, and thus in this case $l(x_0) <_{R_\ell'} r(z) <_{R_\ell'} b_\ell + \varepsilon <_{R_\ell'} l(v)$. This is a contradiction to the assumption that $l(v) <_{R_\ell'} r(z)$. Otherwise, if $z \notin V(G_0)$, then $r(z)$ comes in R_ℓ' (due to Remark 3) immediately after $b_\ell + \varepsilon$ on L_2, and thus in this case $l(x_0) <_{R_\ell'} b_\ell + \varepsilon <_{R_\ell'} r(z) <_{R_\ell'} l(v)$. This is again a contradiction to the assumption that $l(v) <_{R_\ell'} r(z)$. Therefore $l(v) <_{R_\ell} l(x_0)$.

Recall that $L(x_0) <_{R_\ell} R(z)$, and thus also $L(x_0) <_{R_\ell} R(z) <_{R_\ell} L(v)$, since $P_z \ll_{R_\ell} P_v$. Therefore, since also $l(v) <_{R_\ell} l(x_0)$ by the previous paragraph, it follows that P_{x_0} intersects P_v in R_ℓ and

$\phi_{x_0} > \phi_v$ in R_ℓ. If x_0 is bounded, then $x_0v \in E$, and thus $v \in V_0(u)$, since $x_0 \in V_0(u)$ and $v \notin N(u)$, which is a contradiction. Therefore, x_0 is unbounded, and thus $x_0v \notin E$. Therefore, $N(x_0) \subseteq N(v)$ by Lemma 3. Recall now that there exists a bounded covering vertex u^* of u in G, and thus $u^*, x_0 \in V_0(u)$. Furthermore, $u^* \neq x_0$, since x_0 is unbounded. Therefore, since $V_0(u)$ is connected with at least two vertices, x_0 is adjacent to at least one other vertex $y \in V_0(u)$, and thus $y \in N(v)$, since $N(x_0) \subseteq N(v)$. Thus $v \in V_0(u)$, since $v \notin N(u)$, which is again a contradiction. Summarizing, R'_ℓ has no new adjacency zv that is not an adjacency in R_ℓ, for any $v \notin N(u)$ and any $z \in N_1$.

Case 2. $v \in N(u)$. We distinguish in the following the cases where $z \notin V(G_0)$ and $z \in V(G_0)$.

Case 2a. $z \notin V(G_0)$. Since $z \in N(u)$, it follows that P_z intersects P_u in R_ℓ by Corollary 4, and thus P_z intersects the line segment ℓ in R_ℓ. If $v \in V(G_0)$, then P_z intersects P_v in R_ℓ (since $v \in N(u)$), which is a contradiction. Thus, $v \notin V(G_0)$. Therefore, since both $z, v \notin V(G_0)$, and since $P_z \ll_{R_\ell} P_v$, it follows that also $P_z \ll_R P_v$. Therefore, since $v \in N(u)$, it follows that $R(z) <_R L(v) <_R a_u =_R L(u)$ by Lemma 1, and thus $L(x_0) <_{R_\ell} R(z) <_{R_\ell} L(v) <_{R_\ell} a_u$, since the endpoints of P_z and P_v remain the same in both R and R_ℓ. Therefore $x_0 \notin V(G_0)$, since otherwise $L(x_0) >_{R_\ell} a_\ell - \varepsilon >_{R_\ell} a_u$ (by definition of the line segment ℓ). Thus, also $L(x_0) <_R R(z) <_R L(v) <_R a_u$. Furthermore $b_u =_R r(u) <_R r(z) <_R \ell_0 = l(x_0)$ due to Lemma 1, since $z \in N_1$. Then, P_{x_0} intersects P_u in R and $\phi_{x_0} > \phi_u$, since $L(x_0) <_R a_u$ and $b_u <_R l(x_0)$. If $x_0 \notin N(u)$, then $N(x_0) \subseteq N(u)$ by Lemma 3, and thus $x_0 \in Q_u$. This is a contradiction by Lemma 14, since $x_0 \in V_0(u)$ by assumption. Thus $x_0 \in N(u)$, which is again a contradiction, since $x_0 \in V_0(u)$.

Case 2b. $z \in V(G_0)$. Then, note that $r(u) <_{R_0} r(z)$ by Lemma 1, and thus also $b_u <_{R_\ell} r(u) <_{R_\ell} r(z)$, since R_0 is a projection representation of G_0 (and a sub-representation of R_ℓ). Suppose that $v \notin V(G_0)$. Then, since we assumed that $v \in N(u)$, it follows by Corollary 4 that P_v intersects P_u in R_ℓ. That is, P_v intersects the line segment ℓ in R_ℓ, and thus P_v intersects P_z in R_ℓ, which is a contradiction, since $P_z \ll_{R_\ell} P_v$. Therefore, $v \in V(G_0)$.

Consider the projection representation R_0 of G_0 (which is a sub-representation of R_ℓ) and suppose that $x_0 \in V(G_0)$. Then, $r(u) <_{R_0} r(z) <_{R_0} \ell_0 = l(x_0)$ and $L(z) <_{R_0} L(u) = R(u)$ by Lemma 1. If $L(x_0) <_{R_0} R(u)$, then P_u intersects P_{x_0} in R_0 and $\phi_{x_0} > \phi_u$ in R_0. Thus, since $x_0 \in V(G_0) \setminus \{u\}$ and every vertex of $G_0 \setminus \{u\}$ is bounded by Lemma 28, it follows that $x_0 \in N(u)$. This is a contradiction, since $x_0 \in V_0(u)$ by definition of x_0. Therefore $R(u) <_{R_0} L(x_0)$. Recall now that $L(x_0) <_{R_\ell} R(z)$ and $P_z \ll_{R_\ell} P_v$; thus, also $L(x_0) <_{R_0} R(z)$ and $P_z \ll_{R_0} P_v$, since R_0 is a sub-representation of R_ℓ. Therefore, $R(u) <_{R_0} L(x_0) <_{R_0} R(z) <_{R_0} L(v)$ and $r(u) <_{R_0} r(z) <_{R_0} l(v)$. That is, $R(u) <_{R_0} L(v)$ and $r(u) <_{R_0} l(v)$, i.e. $P_u \ll_{R_0} P_v$, and thus $v \notin N(u)$, which is a contradiction to the assumption of Case 2. Therefore, $x_0 \notin V(G_0)$.

Since $x_0 \notin V(G_0)$, i.e. the endpoints of P_{x_0} remain the same in both R and R_ℓ, and since $b_u <_{R_\ell} r(z) <_{R_\ell} \ell_0 = l(x_0)$, it follows that also $b_u <_R l(x_0)$. Suppose that $L(x_0) <_R a_u$. Then, P_{x_0} intersects P_u in R and $\phi_{x_0} > \phi_u$. Thus, x_0 is unbounded, since otherwise $x_0 \in N(u)$, which is a contradiction. Furthermore, $N(x_0) \subseteq N(u)$ by Lemma 3, and thus $x_0 \in Q_u$, which is a contradiction by Lemma 14, since $x_0 \in V_0(u)$ by assumption. Therefore $a_u <_R L(x_0)$, i.e. $P_u \ll_R P_{x_0}$, since also $b_u <_R l(x_0)$. Thus $x_0 \in D_2 \subseteq S_2$, since $x_0 \in V_0(u)$. Furthermore $x_0 \notin N[X_1]$, since $P_x \ll_R P_u \ll_R P_{x_0}$ for every $x \in X_1$. Moreover, $x_0 \notin Q_u$ by Lemma 14 and $x_0 \notin V(\mathcal{B}_1)$ by definition of $\mathcal{B}_1$, since $x_0 \in V_0(u)$. Recall now by Lemma 17 that $V(C_u \cup C_2 \cup H)$ induces a subgraph of $G \setminus Q_u \setminus N[X_1] \setminus \mathcal{B}_1$ that includes all connected components of $G \setminus Q_u \setminus N[X_1] \setminus \mathcal{B}_1$, in which the vertices of $S_2 \cup \{u\}$ belong. Therefore, since $x_0 \in S_2$ and $x_0 \notin Q_u \cup N[X_1] \cup V(\mathcal{B}_1)$, it follows that $x_0 \in V(C_u \cup C_2 \cup H)$. Thus $x_0 \in \bigcup_{i=1}^{\infty} H_i \cup \bigcup_{i=0}^{\infty} H'_i$, since otherwise $x_0 \in V(G_0)$, which is a contradiction. If $x_0 \in \bigcup_{i=0}^{\infty} H'_i$, then $x_0 \in N(u)$ by Lemma 33, which is a contradiction, since $x_0 \in V_0(u)$. Therefore $x_0 \in \bigcup_{i=1}^{\infty} H_i$.

Let $x_0 = v_i \in H_i$, for some $i \geq 1$, and let $(v_0, v_1, \ldots, v_i)$ be an H_i-chain of v_i. Note that $v_j \in N(u) \cup V_0(u)$ for every vertex v_j, where $0 \leq j \leq i$; indeed, if $v_j \notin N(u)$, then $v_j \in V_0(u)$, since $x_2 \in V_0(u)$ and $v_j \in N(x_2)$ by definition of H. Furthermore, recall that every vertex v_j, where $0 \leq j \leq i$, is a bounded vertex by Lemma 28. Therefore, since $v_iv_{i-1} \notin E$, it follows that P_{v_i} does not intersect $P_{v_{i-1}}$ in R_ℓ, i.e. either $P_{v_i} \ll_{R_\ell} P_{v_{i-1}}$ or $P_{v_{i-1}} \ll_{R_\ell} P_{v_i}$. Moreover, either $P_{v_j} \ll_{R_\ell} P_{v_{j-1}}$ or $P_{v_{j-1}} \ll_{R_\ell} P_{v_j}$ for every $j \in \{1, 2, \ldots, i-1\}$ by Lemma 27. Thus, either $P_{v_{j-1}} \ll_{R_\ell} P_{v_j}$ or $P_{v_j} \ll_{R_\ell} P_{v_{j-1}}$ for every $j \in \{1, 2, \ldots, i\}$.

We will prove by induction on j that $v_j \in V_0(u)$, $b_\ell - \varepsilon <_{R_\ell} r(v_j)$, and $L(v_j) <_{R_\ell} a_\ell - \varepsilon$, for every $j \in \{0, 1, \ldots, i\}$. Recall first that every v_j, where $0 \leq j \leq i$, is adjacent to every vertex of $G_0 \setminus \{u\}$ by Lemma 36. Thus, in particular every P_{v_j}, where $0 \leq j \leq i$, intersects the line segment ℓ in R_ℓ, since $R_\ell \setminus \{u\}$ is a projection representation of $G \setminus \{u\}$ by Lemma 37. Furthermore, recall that $v_j \notin V(G_0)$ by definition of G_0, for every $j \in \{0, 1, \ldots, i\}$, and thus the endpoints of every P_{v_j}, $j \in \{0, 1, \ldots, i\}$, remain the same in both R and R_ℓ. Furthermore, since $v_j \notin V(G_0)$, either $l(v_j) <_{R_\ell} b_\ell - \varepsilon$ or $l(v_j) >_{R_\ell} b_\ell + \varepsilon$ by Remark 2, for every v_j, where $0 \leq j \leq i$.

For the induction basis, let $j = i$. Then, $x_0 = v_i \in V_0(u)$ by definition of x_0. If $l(x_0) <_{R_\ell} b_\ell - \varepsilon$, then $l(x_0) <_{R_\ell} b_\ell - \varepsilon <_{R_\ell} r(z) <_{R_\ell} b_\ell + \varepsilon$, since $x_0 \notin V(G_0)$ and $z \in V(G_0)$ (cf. Remark 2). This is a contradiction, since $r(z) <_{R_\ell} \ell_0 = l(x_0)$ by definition of N_1. Therefore $b_\ell + \varepsilon <_{R_\ell} l(x_0) \leq_{R_\ell} r(x_0)$. Thus, since $P_{x_0} = P_{v_i}$ intersects the line segment ℓ in R_ℓ, it follows that $L(x_0) <_{R_\ell} a_\ell - \varepsilon$. That is, $v_i \in V_0(u)$, $b_\ell + \varepsilon <_{R_\ell} r(v_i)$, and $L(v_i) <_{R_\ell} a_\ell - \varepsilon$. This completes the induction basis.

For the induction step, assume that $v_j \in V_0(u)$, $b_\ell + \varepsilon <_{R_\ell} r(v_j)$, and $L(v_j) <_{R_\ell} a_\ell - \varepsilon$, for some $j \in \{1, 2, \ldots, i\}$. We will prove that also $v_{j-1} \in V_0(u)$, $b_\ell + \varepsilon <_{R_\ell} r(v_{j-1})$, and $L(v_{j-1}) <_{R_\ell} a_\ell - \varepsilon$. Let first $P_{v_{j-1}} \ll_{R_\ell} P_{v_j}$. Suppose that $v_{j-1} \notin V_0(u)$. Then, since $v_{j-1} \in N(u) \cup V_0(u)$, it follows that $v_{j-1} \in N(u)$. That is, $P_{v_{j-1}} \ll_{R_\ell} P_{v_j}$, where $v_{j-1} \in N(u)$ and $v_j \in V_0(u)$. This is a contradiction, since u has the right border property in R_ℓ by Lemma 38. Therefore $v_{j-1} \in V_0(u)$. Furthermore, since we assumed that $P_{v_{j-1}} \ll_{R_\ell} P_{v_j}$, and since $L(v_j) <_{R_\ell} a_\ell - \varepsilon$ by the induction hypothesis, it follows that $R(v_{j-1}) <_{R_\ell} L(v_j) <_{R_\ell} a_\ell - \varepsilon$. Thus, also $L(v_{j-1}) <_{R_\ell} a_\ell - \varepsilon$, since $L(v_{j-1}) \leq_{R_\ell} R(v_{j-1})$. Furthermore, since $P_{v_{j-1}}$ intersects the line segment ℓ in R_ℓ, it follows that $b_\ell + \varepsilon <_{R_\ell} r(v_{j-1})$. That is, $v_{j-1} \in V_0(u)$, $b_\ell + \varepsilon <_{R_\ell} r(v_{j-1})$, and $L(v_{j-1}) <_{R_\ell} a_\ell - \varepsilon$.

Let now $P_{v_j} \ll_{R_\ell} P_{v_{j-1}}$, and thus also $P_{v_j} \ll_R P_{v_{j-1}}$, since $v_{j-1}, v_j \notin V(G_0)$. Then, since $b_\ell + \varepsilon <_{R_\ell} r(v_j)$ (and thus also $b_\ell + \varepsilon <_R r(v_j)$) by the induction hypothesis, it follows that $b_\ell + \varepsilon <_{R_\ell} r(v_j) <_{R_\ell} l(v_{j-1})$. Therefore $b_\ell + \varepsilon <_{R_\ell} r(v_{j-1})$, since $l(v_{j-1}) \leq_{R_\ell} r(v_{j-1})$. Furthermore, since $b_\ell + \varepsilon <_{R_\ell} l(v_{j-1})$, and since $P_{v_{j-1}}$ intersects the line segment ℓ in R_ℓ, it follows that $R(v_{j-1}) <_{R_\ell} a_\ell - \varepsilon$. Therefore $L(v_{j-1}) <_{R_\ell} a_\ell - \varepsilon$, since $L(v_{j-1}) \leq_{R_\ell} R(v_{j-1})$. That is, $b_\ell + \varepsilon <_{R_\ell} r(v_{j-1})$ and $L(v_{j-1}) <_{R_\ell} a_\ell - \varepsilon$. Recall that also $b_\ell + \varepsilon <_{R_\ell} l(v_{j-1})$. Thus $b_u <_R b_\ell + \varepsilon <_R l(v_{j-1})$, since $b_u <_R b_\ell$ (by definition of the line segment ℓ), and since the endpoints of $P_{v_{j-1}}$ remain the same in both R and R_ℓ. Suppose now that $v_{j-1} \notin V_0(u)$. Then, since $v_{j-1} \in N(u) \cup V_0(u)$, it follows that $v_{j-1} \in N(u)$, i.e. in particular $P_{v_{j-1}}$ intersects P_u in R. Thus, since $b_u =_R r(u) <_R l(v_{j-1})$, it follows that $L(v_{j-1}) <_R a_u =_R L(u)$. Therefore $R(v_j) <_R L(v_{j-1}) <_R a_u$, since we assumed that $P_{v_j} \ll_R P_{v_{j-1}}$. Then, since $R(v_j) <_R a_u$ and $b_u <_R b_\ell + \varepsilon <_R r(v_j)$, it follows that P_{v_j} intersects P_u in R and $\phi_{v_j} > \phi_u$. Thus $v_j \in N(u)$, since v_j is bounded in R, which is a contradiction to the induction hypothesis that $v_j \in V_0(u)$. Therefore, $v_{j-1} \in V_0(u)$. This completes the induction step, and thus $v_j \in V_0(u)$, $b_\ell - \varepsilon <_{R_\ell} r(v_j)$, and $L(v_j) <_{R_\ell} a_\ell - \varepsilon$, for every $j \in \{0, 1, \ldots, i\}$.

Consider now the vertex $v_0 \in H_0 = N$. Then P_{v_0} intersects P_u in R, since $v_0 \in N(X_1) \cap N(x_2)$ by Lemma 20, and since $P_x \ll_R P_u \ll_R P_{x_2}$ for every $x \in X_1$. Recall that $x_0 = v_i \in H_i$, for some $i \geq 1$, and that $(v_0, v_1, \ldots, v_i)$ is an H_i-chain of v_i. Thus, in particular, v_1 exists, since $i \geq 1$. Furthermore, $L(v_1) <_{R_\ell} a_\ell - \varepsilon$ by the previous paragraph. Thus also $L(v_1) <_R a_\ell - \varepsilon$, since the endpoints of P_{v_1} remain the same in both R and R_ℓ. Therefore, since $P_{v_0} \ll_R P_{v_1}$ by Lemma 26, it follows that $R(v_0) <_R L(v_1) <_R a_\ell - \varepsilon$. On the other hand, $b_\ell - \varepsilon <_{R_\ell} r(v_0)$ by the previous paragraph, and thus also $b_\ell - \varepsilon <_R r(v_0)$. That is, $R(v_0) <_R a_\ell - \varepsilon$ and $b_\ell - \varepsilon <_R r(v_0)$, and thus in particular $\phi_{v_0} > \phi_\ell$ in R. Therefore $\phi_{v_0} > \phi_\ell \geq \phi_u$ in R, since $\phi_\ell \geq \phi_u$ in R by the definition of the line segment ℓ. Thus, since P_{v_0} intersects P_u in R, it follows that $v_0 \in N(u)$. This is a contradiction, since $v_0 \in V_0(u)$ by the previous paragraph.

This completes Case 2b, and thus also due to Cases 1 and 2a, it follows that R'_ℓ has no new adjacency zv that is not an adjacency in R_ℓ, for any $z \in N_1$, i.e. $R'_\ell \setminus \{u\}$ is a projection representation of $G \setminus \{u\}$. This completes the proof of the lemma. ■

Lemma 42 *$R''_\ell \setminus \{u\}$ is a projection representation of $G \setminus \{u\}$.*

Proof. Denote by z_0 the vertex of N_2, such that $r_0 = r(z_0)$. Since during Transformation 5 we move the right line of some parallelograms to the left, i.e. we decrease some parallelograms, no new adjacencies are introduced in R''_ℓ in comparison to R'_ℓ. Suppose that $vx \in E$ and that the adjacency vx

has been removed from R'_ℓ in R''_ℓ, for some $v \in V_0(u) \cap V_B$, such that $r(v) >_{R'_\ell} r_0 = r(z_0)$. Therefore, since we perform parallel movements of lines in R'_ℓ, i.e. since every angle ϕ_y in R''_ℓ equals the value of ϕ_y in R'_ℓ for every vertex y of G, it follows that $P_v \ll_{R''_\ell} P_x$ and that P_v intersects P_x in R'_ℓ. Note that $l(v) \leq_{R'_\ell} \ell_0$, since $v \in V_0(u)$ and $\ell_0 = \max_{R'_\ell}\{l(x) \mid x \in V_0(u)\}$.

We first assume that $x \notin N(u)$. Since $r(v)$ comes in R''_ℓ immediately before r_0, and since $P_v \ll_{R''_\ell} P_x$, it follows that $r(v) <_{R''_\ell} r_0 <_{R''_\ell} l(x)$, and thus also $r_0 <_{R'_\ell} l(x)$. Furthermore, since $vx \in E$ by assumption, and since $v \in V_0(u)$, it follows that $x \in V_0(u)$. Therefore $l(x) \leq_{R'_\ell} \ell_0$, since $\ell_0 = \max_{R'_\ell}\{l(x) \mid x \in V_0(u)\}$, and thus $r_0 = r(z_0) <_{R'_\ell} l(x) \leq_{R'_\ell} \ell_0$, i.e. $r(z_0) <_{R'_\ell} \ell_0$. This is a contradiction, since $z_0 \in N_2$. Therefore, no adjacency vx has been removed from R'_ℓ in R''_ℓ in the case where $x \notin N(u)$.

Assume now that $x \in N(u)$, and thus the endpoints of P_x in R'_ℓ remain the same also in R''_ℓ.

Case 1. $v \in V(G_0)$. Then, since the endpoints of P_v do not move during Transformation 4, it follows by Remark 2 that $b_\ell - \varepsilon <_{R'_\ell} l(v) \leq_{R'_\ell} r(v) <_{R'_\ell} b_\ell + \varepsilon$ and $a_\ell - \varepsilon <_{R'_\ell} L(v) \leq_{R'_\ell} R(v) <_{R'_\ell} a_\ell + \varepsilon$ in R'_ℓ. Thus, in particular also $b_\ell - \varepsilon <_{R''_\ell} l(v)$ and $a_\ell - \varepsilon <_{R''_\ell} L(v)$ in R''_ℓ, since the left lines of all parallelograms do not move during Transformation 5. Therefore $b_\ell - \varepsilon <_{R''_\ell} l(v) <_{R''_\ell} l(x)$ and $a_\ell - \varepsilon <_{R''_\ell} L(v) <_{R''_\ell} L(x)$, since $P_v \ll_{R''_\ell} P_x$. Furthermore, also $b_\ell - \varepsilon <_{R_\ell} l(x)$ and $a_\ell - \varepsilon <_{R_\ell} L(x)$ in R_ℓ, since left lines of all parallelograms do not move during Transformations 4 and 5. We distinguish in the following the cases where $x \notin V(G_0)$ and $x \in V(G_0)$.

Case 1a. $x \notin V(G_0)$. Then, either $l(x) <_{R_\ell} b_\ell - \varepsilon$ or $l(x) >_{R_\ell} b_\ell + \varepsilon$ (resp. either $L(x) <_{R_\ell} a_\ell - \varepsilon$ or $L(x) >_{R_\ell} a_\ell + \varepsilon$) by Remark 2. Thus, since $b_\ell - \varepsilon <_{R_\ell} l(x)$ and $a_\ell - \varepsilon <_{R_\ell} L(x)$ by the previous paragraph, it follows that $l(x) >_{R_\ell} b_\ell + \varepsilon$ and $L(x) >_{R_\ell} a_\ell + \varepsilon$. Therefore $r(v) <_{R_\ell} b_\ell + \varepsilon <_{R_\ell} l(x)$ and $R(v) <_{R_\ell} a_\ell + \varepsilon <_{R_\ell} L(x)$ by Remark 2, i.e. $P_v \ll_{R_\ell} P_x$ in R_ℓ, and thus $vx \notin E$. This is a contradiction, since we assumed that $vx \in E$.

Case 1b. $x \in V(G_0)$. Recall by Lemma 39 that $r(u) <_{R'_\ell} r_0 = r(z_0)$, and thus $r(u) <_{R'_\ell} r_0 <_{R'_\ell} r(v)$. Therefore, since $r(v)$ comes immediately before r_0 in R''_ℓ during Transformation 5, it follows that $r(u) <_{R''_\ell} r(v) <_{R''_\ell} r_0$. Therefore, $r(u) <_{R''_\ell} r(v) <_{R''_\ell} l(x)$, since $P_v \ll_{R''_\ell} P_x$. Suppose that P_x intersects P_u in R''_ℓ. Then, since $r(u) <_{R''_\ell} l(x)$, it follows that $L(x) <_{R''_\ell} R(u)$; thus $R(v) <_{R''_\ell} L(x) <_{R''_\ell} R(u)$, since $P_v \ll_{R''_\ell} P_x$. That is, $r(u) <_{R''_\ell} r(v)$ and $R(v) <_{R''_\ell} R(u)$, i.e. P_v intersects P_u in R''_ℓ and $\phi_v > \phi_u$ in R''_ℓ. Therefore, P_v intersects P_u and $\phi_v > \phi_u$ also in R'_ℓ and in R_ℓ. Thus, since $v \in V(G_0)$, and since R_0 is a sub-representation of R_ℓ, P_v intersects P_u in R_0 and $\phi_v > \phi_u$ in R_0. Therefore, since v is bounded (recall that $v \in V_0(u) \cap V_B$ by our initial assumption on v), it follows that $v \in N(u)$, which is a contradiction. Therefore, P_x does not intersect P_u in R''_ℓ, and thus $P_u \ll_{R''_\ell} P_x$, since $r(u) <_{R''_\ell} l(x)$. Thus also $P_u \ll_{R'_\ell} P_x$ and $P_u \ll_{R_\ell} P_x$, since the left line of P_x does not move by Transformations 4 and 5. Therefore $P_u \ll_{R_0} P_x$, since $x \in V(G_0)$ and R_0 is a sub-representation of R_ℓ. Thus $x \notin N(u)$, which is a contradiction to our assumption on x.

Case 2. $v \notin V(G_0)$.

Case 2a. $x \notin V(G_0)$. We will now prove that $b_u <_{R''_\ell} r(v) <_{R''_\ell} l(x)$. Recall that $z_0 \in N(u)$. Thus, if $z_0 \in V(G_0)$, then $r(u) <_{R_0} r(z_0)$ by Lemma 1, and thus also $r(u) <_{R_\ell} r(z_0)$, since R_0 is a sub-representation of R_ℓ. Furthermore $b_u <_{R'_\ell} r(u) <_{R'_\ell} r(z_0)$, since the right endpoint $r(z_0)$ of P_{z_0} does not decrease by Transformation 4. On the other hand, let $z_0 \notin V(G_0)$. Then $b_u <_R r(z_0)$ by Lemma 1, and thus also $b_u <_{R_\ell} r(z_0)$, since $z_0 \notin V(G_0)$ (i.e. the endpoints of P_{z_0} are the same in both R and R_ℓ). Furthermore $b_u <_{R'_\ell} r(z_0)$, since $r(z_0)$ does not decrease by Transformation 4. That is, $b_u <_{R'_\ell} r(z_0) = r_0 <_{R'_\ell} r(v)$ in both cases where $z_0 \in V(G_0)$ and $z_0 \notin V(G_0)$. Therefore, since $r(v)$ comes immediately before $r_0 = r(z_0)$ in R''_ℓ by Transformation 5, it follows that $b_u <_{R''_\ell} r(v) <_{R''_\ell} r_0$. Thus, $b_u <_{R''_\ell} r(v) <_{R''_\ell} l(x)$, since $P_v \ll_{R''_\ell} P_x$.

Furthermore, since the left lines of the parallelograms do not move by Transformations 4 and 5, it follows that also $b_u <_{R_\ell} l(x)$. Therefore $r(u) =_R b_u <_R l(x)$, since $x \notin V(G_0)$ (i.e. the endpoints of P_x are the same in both R and R_ℓ). Thus, since we assumed that $x \in N(u)$, it follows that $L(x) <_R a_u =_R L(u)$. Similarly, since the left lines of the parallelograms do not move by Transformations 4 and 5, and since $x \notin V(G_0)$, it follows that also $L(x) <_{R_\ell} a_u$ and $L(x) <_{R''_\ell} a_u$. Thus, $R(v) <_{R''_\ell} L(x) <_{R''_\ell} a_u$,

since $P_v \ll_{R''_\ell} P_x$. That is, $b_u <_{R''_\ell} r(v)$ (by the previous paragraph) and $L(v) \leq_{R''_\ell} R(v) <_{R''_\ell} a_u$. Therefore, since the angle ϕ_v of P_v (where $v \notin V(G_0)$) remains the same in the representations R, R_ℓ, R'_ℓ, and R''_ℓ, and since the lower right endpoint $r(v)$ in R is greater than or equal to the corresponding value $r(v)$ in R''_ℓ, it follows that P_v intersects P_u in R and $\phi_v > \phi_u$ in R. Thus $v \in N(u)$, since v is bounded (recall that $v \in V_0(u) \cap V_B$), which is a contradiction to the assumption that $v \in V_0(u)$.

Case 2b. $x \in V(G_0)$. Recall that $v \notin V(G_0)$ by the assumption of Case 2. Therefore, since $vx \notin E$, it follows by Lemma 36 that $v \in N(X_1) \cup \bigcup_{i=1}^{\infty} H_i \bigcup_{i=0}^{\infty} H'_i$. Recall that $v \in V_0(u) \cap V_B$, and thus in particular $v \notin N(u)$. Therefore $v \notin \bigcup_{i=0}^{\infty} H'_i$ by Lemma 33, and thus $v \in N(X_1) \cup \bigcup_{i=1}^{\infty} H_i$. We distinguish in the following the cases where $v \in N(X_1)$ and $v \in \bigcup_{i=1}^{\infty} H_i$.

Case 2b-i. $v \in N = N(X_1)$. Then, P_v intersects P_u in R, since $v \in N(X_1) \cap N(x_2)$ by Lemma 20, and since $P_x \ll_R P_u \ll_R P_{x_2}$ for every $x \in X_1$. Recall that v is bounded and $v \notin N(u)$, since $v \in V_0(u) \cap V_B$ by our initial assumption on v, and thus $\phi_v < \phi_u \leq \phi_\ell$ in R. Therefore, $\phi_v < \phi_\ell$ also in R_ℓ, since $v \notin V(G_0)$ (i.e. the endpoints of P_v remain the same in both R and R_ℓ). On the other hand, since $z_0 \in N(u)$, it follows that $\phi_{z_0} > \phi_u$ in R, and thus $\phi_v < \phi_u < \phi_{z_0}$ in R. Furthermore, recall by Remark 2 that $b_\ell - \varepsilon <_{R_\ell} l(x) <_{R_\ell} b_\ell + \varepsilon$ in R_ℓ, since $x \in V(G_0)$ by the assumption of Case 2b. Therefore, since the left lines of the parallelograms do not move by Transformations 4 and 5, it follows that also $b_\ell - \varepsilon <_{R''_\ell} l(x) <_{R''_\ell} b_\ell + \varepsilon$ in R''_ℓ. Similarly, it follows by to Remark 2 that $a_\ell - \varepsilon <_{R''_\ell} L(x) <_{R''_\ell} a_\ell + \varepsilon$ in R''_ℓ.

Let first $z_0 \notin V(G_0)$. Then, either $r(z_0) >_{R'_\ell} b_\ell + \varepsilon$ or $r(z_0) <_{R'_\ell} b_\ell - \varepsilon$ by Remark 3. Suppose that $r(z_0) >_{R'_\ell} b_\ell + \varepsilon$. Then, since $r(v)$ comes by Transformation 5 immediately before $r_0 = r(z_0)$ in R''_ℓ, it follows that $b_\ell + \varepsilon <_{R''_\ell} r(v) <_{R''_\ell} r(z_0)$. Thus $b_\ell + \varepsilon <_{R''_\ell} r(v) <_{R''_\ell} l(x)$, since $P_v \ll_{R''_\ell} P_x$. This is a contradiction, since $b_\ell - \varepsilon <_{R''_\ell} l(x) <_{R''_\ell} b_\ell + \varepsilon$. Therefore $r(z_0) <_{R'_\ell} b_\ell - \varepsilon$.

Recall now by Corollary 4 that P_{z_0} intersects P_u in R_ℓ, since $z_0 \in N(u)$. Therefore, since P_{z_0} does not decrease during Transformation 4, P_{z_0} intersects P_u also in R'_ℓ, i.e. P_{z_0} intersects the line segment ℓ in R'_ℓ. Furthermore, since $z_0 \notin V(G_0)$, either $R(z_0) >_{R'_\ell} a_\ell + \varepsilon$ or $R(z_0) <_{R'_\ell} a_\ell - \varepsilon$ by Remark 3. Therefore, since $r(z_0) <_{R'_\ell} b_\ell - \varepsilon$ and P_{z_0} intersects the line segment ℓ in R'_ℓ, it follows that $R(z_0) >_{R'_\ell} a_\ell + \varepsilon$; thus also $R(z_0) >_{R''_\ell} a_\ell + \varepsilon$, since the endpoints of P_{z_0} do not change by Transformation 5. Recall now that $\phi_v < \phi_{z_0}$ in R. Therefore also $\phi_v < \phi_{z_0}$ in R''_ℓ, since $v, z_0 \notin V(G_0)$ (i.e. the angles ϕ_{z_0} and ϕ_v remain the same in both R and R''_ℓ). Furthermore, recall that $r(v)$ comes by Transformation 5 immediately before $r(z_0)$ (i.e. sufficiently close to $r(z_0)$) in R''_ℓ. Therefore, since $a_\ell + \varepsilon <_{R''_\ell} R(z_0)$ and $\phi_v < \phi_{z_0}$ in R''_ℓ, it follows that $a_\ell + \varepsilon <_{R''_\ell} R(z_0) <_{R''_\ell} R(v)$. Thus $a_\ell + \varepsilon <_{R''_\ell} R(v) <_{R''_\ell} L(x)$, since $P_v \ll_{R''_\ell} P_x$. This is a contradiction, since $a_\ell - \varepsilon <_{R''_\ell} L(x) <_{R''_\ell} a_\ell + \varepsilon$ in R''_ℓ.

Let now $z_0 \in V(G_0)$. Then $r(u) <_{R_0} r(z_0)$ by Lemma 1, since $z_0 \in N(u)$. Thus, also $r(u) <_{R_\ell} r(z_0)$, since R_0 is a sub-representation of R_ℓ. Furthermore $r(u) <_{R''_\ell} r(z_0)$, since the value $r(z_0)$ does not decrease by Transformations 4 and 5. Therefore, since $r(v)$ comes by Transformation 5 immediately before $r(z_0)$, it follows that $r(u) <_{R''_\ell} r(v) <_{R''_\ell} r(z_0)$. Similarly, $L(x) <_{R_0} L(u)$ by Lemma 1, since $x \in N(u)$, and thus also $L(x) <_{R_\ell} L(u)$. Furthermore $L(x) <_{R''_\ell} L(u)$, since the left lines of the parallelograms do not move by Transformations 4 and 5. Therefore $R(v) <_{R''_\ell} L(x) <_{R''_\ell} L(u)$, since $P_v \ll_{R''_\ell} P_x$. That is, $r(u) <_{R''_\ell} r(v)$ and $R(v) <_{R''_\ell} L(u) = R(u)$, and thus $\phi_v > \phi_u$ in R''_ℓ. Therefore, $\phi_v > \phi_u$ also in R_ℓ, since all the angles are the same in both R_ℓ and R''_ℓ. However, recall that $\phi_v < \phi_\ell$ in R_ℓ (as we proved in the beginning of Case 2b-i), and thus $\phi_v < \phi_u$ in R_ℓ by Remark 1, since $u \in V(G_0)$. This is a contradiction, since $\phi_v > \phi_u$ in R_ℓ.

Case 2b-ii. $v \in \bigcup_{i=1}^{\infty} H_i$. Let $v = v_i \in H_i$ for some $i \geq 1$ and let $(v_0, v_1, \ldots, v_i)$ be an H_i-chain of v_i. Recall that $P_v \ll_{R''_\ell} P_x$ and that P_v intersects P_x in R'_ℓ by our initial assumption on v and on x. Assume w.l.o.g. that $i \geq 1$ is the smallest index, such that $P_v = P_{v_i}$ does not intersect P_x in R''_ℓ, i.e. in particular $P_{v_{i-1}}$ intersects P_x in R''_ℓ. Recall that both v_i and v_{i-1} are bounded by Lemma 28, and thus P_{v_i} does not intersect $P_{v_{i-1}}$ in R'_ℓ, i.e. either $P_{v_{i-1}} \ll_{R'_\ell} P_{v_i}$ or $P_{v_i} \ll_{R'_\ell} P_{v_{i-1}}$. Let first $P_{v_{i-1}} \ll_{R'_\ell} P_{v_i}$. Recall that the left line of P_{v_i} does not move by Transformation 5 and that the right line of $P_{v_{i-1}}$ is possibly moved to the left by Transformation 5. Thus, also $P_{v_{i-1}} \ll_{R''_\ell} P_{v_i}$ in R''_ℓ. Furthermore, since $P_{v_i} = P_v \ll_{R''_\ell} P_x$ by our assumption on v, it follows that $P_{v_{i-1}} \ll_{R'_\ell} P_x$. This is a contradiction, since

$P_{v_{i-1}}$ intersects P_x in R''_ℓ.

Let now $P_{v_i} \ll_{R'_\ell} P_{v_{i-1}}$, and thus in particular $l(v_i) <_{R'_\ell} l(v_{i-1})$. Thus also $l(v_i) <_{R_\ell} l(v_{i-1})$, since the left lines of P_{v_i} and $P_{v_{i-1}}$ do not move by Transformation 4. Furthermore $l(v_i) <_R l(v_{i-1})$, since $v_i, v_{i-1} \notin V(G_0)$ (i.e. P_{v_i} and $P_{v_{i-1}}$ remain the same in both R and R_ℓ). Recall now that v_i and v_{i-1} are bounded by Lemma 28, and thus P_{v_i} does not intersect $P_{v_{i-1}}$ in R, i.e. either $P_{v_{i-1}} \ll_R P_{v_i}$ or $P_{v_i} \ll_R P_{v_{i-1}}$. Therefore, since $l(v_i) <_R l(v_{i-1})$, it follows that $P_{v_i} \ll_R P_{v_{i-1}}$.

We will now prove that $b_u <_R r(v_i) <_R l(v_{i-1})$. Recall that $z_0 \in N(u)$. Thus, if $z_0 \in V(G_0)$, then $r(u) <_{R_0} r(z_0)$ by Lemma 1, and thus also $r(u) <_{R_\ell} r(z_0)$, since R_0 is a sub-representation of R_ℓ. Furthermore $b_u <_{R'_\ell} r(u) <_{R'_\ell} r(z_0)$, since the right endpoint $r(z_0)$ of P_{z_0} does not decrease by Transformation 4. On the other hand, let $z_0 \notin V(G_0)$. Then $b_u <_R r(z_0)$ by Lemma 1, and thus also $b_u <_{R_\ell} r(z_0)$, since $z_0 \notin V(G_0)$ (i.e. the endpoints of P_{z_0} are the same in both R and R_ℓ). Furthermore $b_u <_{R'_\ell} r(z_0)$, since $r(z_0)$ does not decrease by Transformation 4. That is, in both cases where $z_0 \in V(G_0)$ and $z_0 \notin V(G_0)$, it follows that $b_u <_{R'_\ell} r(z_0) = r_0 <_{R'_\ell} r(v)$ (since $r_0 <_{R'_\ell} r(v)$ by our initial assumption on v), and thus $b_u <_{R'_\ell} r(v) = r(v_i)$. Furthermore, $b_u <_{R'_\ell} r(v_i) <_{R'_\ell} l(v_{i-1})$, since we assumed that $P_{v_i} \ll_{R'_\ell} P_{v_{i-1}}$. Recall now that the value $r(v_i)$ remains the same in both R_ℓ and R'_ℓ, since $v_i \notin N(u)$ and by Transformation 4 only some endpoints of vertices of $N(u)$ are moved. Furthermore, the value $l(v_{i-1})$ remains the same in both R_ℓ and R'_ℓ, since the left lines of the parallelograms do not move by Transformation 4. Therefore $b_u <_{R_\ell} r(v_i) <_{R_\ell} l(v_{i-1})$, since also $b_u <_{R'_\ell} r(v_i) <_{R'_\ell} l(v_{i-1})$. Moreover, since $v_i, v_{i-1} \notin V(G_0)$ (i.e. the endpoints of P_{v_i} and $P_{v_{i-1}}$ remain the same in both R and R_ℓ), it follows that $b_u <_R r(v_i) <_R l(v_{i-1})$.

Suppose that $v_{i-1} \in N(u)$. Then $L(v_{i-1}) <_R L(u) = a_u$ by Lemma 1, and thus $R(v_i) <_R L(v_{i-1}) <_R a_u$, since $P_{v_i} \ll_R P_{v_{i-1}}$. That is, $R(v_i) <_R a_u$ and $b_u <_R r(v_i)$ (by the previous paragraph). Therefore, P_{v_i} intersects P_u in R and $\phi_{v_i} > \phi_u$ in R. Thus, since v_i is bounded, it follows that $v_i \in N(u)$. This is a contradiction to the assumption that $v_i = v \in V_0(u)$. Therefore $v_{i-1} \notin N(u)$. Thus, since $v_{i-1} \in N(x_2)$ (by definition of H) and $x_2 \in V_0(u)$, it follows that $v_{i-1} \in V_0(u)$. Therefore, in particular $l(v_{i-1}) \leq_{R'_\ell} \ell_0$, since $\ell_0 = \max_{R'_\ell}\{l(x) \mid x \in V_0(u)\}$.

Recall now that $P_{v_i} \ll_{R'_\ell} P_{v_{i-1}}$ (as we assumed) and that $r_0 = r(z_0) <_{R'_\ell} r(v) = r(v_i)$ (by our initial assumption on v). Therefore $r(z_0) <_{R'_\ell} r(v_i) <_{R'_\ell} l(v_{i-1}) \leq_{R'_\ell} \ell_0$, i.e. $r(z_0) <_{R'_\ell} \ell_0$. This is a contradiction, since $z_0 \in N_2$.

Summarizing Cases 1 and 2, it follows that no adjacency vx has been removed from R'_ℓ in R''_ℓ in the case where $x \in N(u)$. This completes the proof of the lemma. ■

Lemma 43 *R'''_ℓ is a projection representation of G.*

Proof. The proof is done in two parts. In Part 1 we prove that u is adjacent in R'''_ℓ to all vertices of $N(u)$, while in Part 2 we prove that u is not adjacent in R'''_ℓ to any vertex of $V \setminus N[u]$.

Part 1. In this part we prove that u is adjacent in R'''_ℓ to all vertices of $N(u)$. Denote by $\widehat{a}_u$ and $\widehat{b}_u$ the coordinates of the upper and lower endpoint of P_u in the projection representation R_ℓ on L_1 and on L_2, respectively. Then, since the endpoints of P_u do not move by Transformations 4 and 5, $\widehat{a}_u$ and $\widehat{b}_u$ remain the endpoints of P_u also in the representations R'_ℓ and R''_ℓ. Let $z \in N(u)$ be arbitrary. Suppose that $z \notin V(G_0)$. Then, the left line of P_z remains the same in the representations R, R_ℓ, R'_ℓ, and R''_ℓ. Therefore, since $L(z) <_R a_u =_R L(u)$ by Lemma 1, it follows that also $L(z) <_{R''_\ell} a_u <_{R''_\ell} L(u) = \widehat{a}_u$. Suppose that $z \in V(G_0)$. Then, $L(z) <_{R_0} L(u)$ by Lemma 1, since R_0 is a projection representation of G_0, and thus also $L(z) <_{R_\ell} L(u) = \widehat{a}_u$, since R_0 is a sub-representation of R_ℓ. Furthermore $L(z) <_{R''_\ell} L(u) = \widehat{a}_u$, since the left line of P_z remains the same in the representations R_ℓ, R'_ℓ, and R''_ℓ. Summarizing, $L(z) <_{R''_\ell} \widehat{a}_u$ for every vertex $z \in N(u)$. Therefore, since the endpoint $L(z)$ does not move by Transformation 6, it follows that also $L(z) <_{R'''_\ell} \widehat{a}_u$ for every vertex $z \in N(u)$.

Note now that $\widehat{a}_u <_{R''_\ell} L_0$, since $L_0 = \min_{R''_\ell}\{L(x) \mid x \in V_B \setminus N(u) \setminus V_0(u), P_u \ll_{R''_\ell} P_x\}$. Furthermore, recall by Corollary 5 that for all vertices $z \in N_1 \setminus N_2$, for which $R(z) <_{R''_\ell} L_0$, the values $R(z)$ lie immediately before L_0 in R''_ℓ. Therefore, since $\widehat{a}_u <_{R''_\ell} L_0$, it follows in particular that $\widehat{a}_u <_{R''_\ell} R(z)$ for every $z \in N_1 \setminus N_2$, and thus $L(z) <_{R''_\ell} \widehat{a}_u <_{R''_\ell} R(z)$ for every $z \in N_1 \setminus N_2 \subseteq N(u)$

by the previous paragraph. Therefore, since $\widehat{a}_u <_{R''_\ell} L_0$, and since the upper endpoint $R(u)$ of the line P_u lies in R''_ℓ immediately before $\min_{R''_\ell}\{L_0, R(z) \mid z \in N_1 \setminus N_2\}$, cf. the statement of Transformation 6, it follows that also $L(z) <_{R'''_\ell} \widehat{a}_u <_{R'''_\ell} R(u) <_{R'''_\ell} R(z)$ for every $z \in N_1 \setminus N_2$. That is, $L(z) <_{R'''_\ell} R(u) <_{R'''_\ell} R(z)$ for every $z \in N_1 \setminus N_2$, and thus P_u intersects P_z in R'''_ℓ for every $z \in N_1 \setminus N_2$. Therefore, since all vertices of $\{u\} \cup N_1 \setminus N_2$ are bounded in R'''_ℓ, u is adjacent in R'''_ℓ to all vertices of $N_1 \setminus N_2$.

Consider now an arbitrary vertex $z \in N_2$. Recall that $r_0 = \min_{R'_\ell}\{r(z) \mid z \in N_2\}$, i.e. $r_0 \leq_{R'_\ell} r(z)$. Thus, since the endpoint $r(z)$ does not move by Transformation 5, it follows that also $r_0 \leq_{R''_\ell} r(z)$. Furthermore, by Transformation 5, $r(v) <_{R''_\ell} r_0 \leq_{R''_\ell} r(z)$ for every $v \in V_0(u) \cap V_B$. This holds clearly also in R'''_ℓ, i.e. $r(v) <_{R'''_\ell} r(z)$ for every $v \in V_0(u) \cap V_B$. Since the lower endpoint of the line P_u comes immediately after $\max_{R'''_\ell}\{r(v) \mid V_0(u) \cap V_B\}$, it follows that $r(v) <_{R'''_\ell} l(u) = r(u) <_{R'''_\ell} r(z)$ for every $v \in V_0(u) \cap V_B$ and every $z \in N_2$. Thus, since also $L(z) <_{R'''_\ell} \widehat{a}_u <_{R'''_\ell} R(u)$ for every $z \in N(u)$, it follows that P_u intersects P_z in R'''_ℓ for every $z \in N_2$. Therefore, since all vertices of $\{u\} \cup N_2$ are bounded in R'''_ℓ, u is adjacent in R'''_ℓ to all vertices of N_2. Thus, since $N_2 \cup (N_1 \setminus N_2) = N(u)$, u is adjacent in R'''_ℓ to all vertices of $N(u)$.

Part 2. In this part we prove that u is not adjacent in R'''_ℓ to any vertex of $V \setminus N[u]$. To this end, recall first by Lemma 4 that u^* is a bounded covering vertex of u in G (and thus $u^* \in V_0(u) \cap V_B$), such that P_u intersects P_{u^*} in the initial projection representation R and $\phi_{u^*} < \phi_u$ in R. Therefore, $l(u^*) <_R b_u =_R r(u)$ by Lemma 2. Furthermore, $u^* \notin V(G_0)$ by Observation 5. Therefore, the endpoint $l(u^*)$ remains the same in the representations R, R_ℓ, R'_ℓ, and R''_ℓ, and thus $l(u^*) <_{R''_\ell} b_u$, since also $l(u^*) <_R b_u$. Therefore, since $b_u <_{R''_\ell} \widehat{b}_u =_{R''_\ell} r(u)$, it follows that also $l(u^*) <_{R''_\ell} \widehat{b}_u =_{R''_\ell} r(u)$. Recall now that $L_0 = \min_{R''_\ell}\{L(x) \mid x \in V_B \setminus N(u) \setminus V_0(u), P_u \ll_{R''_\ell} P_x\}$. Denote by y_0 the vertex of $V_B \setminus N(u) \setminus V_0(u)$, such that $L_0 = L(y_0)$ in R''_ℓ, and thus $P_u \ll_{R''_\ell} P_{y_0}$. Therefore, since $l(u^*) <_{R''_\ell} r(u)$, it follows that $l(u^*) <_{R''_\ell} r(u) <_{R''_\ell} l(y_0)$. Now, since $u^* \in V_0(u)$ and $y_0 \notin N(u) \cup V_0(u)$, it follows that $u^*y_0 \notin E$. Thus, $P_{u^*} \ll_{R''_\ell} P_{y_0}$, since both u^* and y_0 are bounded vertices and $l(u^*) <_{R''_\ell} l(y_0)$. Moreover, since by Transformation 6 only the line P_u is moved, it follows that also $P_{u^*} \ll_{R'''_\ell} P_{y_0}$.

Recall that $u^* \notin V(G_0)$ and that u^* is adjacent to every vertex of $V(G_0) \setminus \{u\}$ by Observation 5. Therefore $u^* \in N(x_2)$, since $x_2 \in V(G_0) \setminus \{u\}$, and thus P_{u^*} intersects the line segment ℓ in R_ℓ; in particular, P_{u^*} intersects P_u in R_ℓ. Moreover, since by Transformation 4 the parallelogram P_{u^*} is not modified, P_{u^*} intersects P_u also in R'_ℓ. Denote by z_0 the vertex of N_2, such that $r_0 = r(z_0)$. We will now prove that $r(u) <_{R'_\ell} r_0 = r(z_0)$. Suppose first that $z_0 \notin V(G_0)$. Then, in particular, either $r(z_0) <_{R'_\ell} b_\ell - \varepsilon <_{R'_\ell} l(x_2)$ or $r(x_2) <_{R'_\ell} b_\ell + \varepsilon <_{R'_\ell} r(z_0)$ by Remarks 2 and 3. Recall that $\ell_0 = \max_{R'_\ell}\{l(x) \mid x \in V_0(u)\}$ and that $z_0 \in N_2$, and thus $l(x_2) \leq_{R'_\ell} \ell_0 <_{R'_\ell} r(z_0)$. Therefore $r(x_2) <_{R'_\ell} b_\ell + \varepsilon <_{R'_\ell} r(z_0)$. Thus, since $u \in V(G_0)$, also $r(u) <_{R'_\ell} b_\ell + \varepsilon <_{R'_\ell} r(z_0)$ in the case where $z_0 \notin V(G_0)$. Suppose now that $z_0 \in V(G_0)$; then $r(u) <_{R_0} r(z_0)$ by Lemma 1. Thus, since R_0 is a sub-representation of R'_ℓ, and since $r(z_0)$ does not decrease by Transformation 4, it follows that $r(u) <_{R'_\ell} r(z_0) = r_0$ in the case where $z_0 \in V(G_0)$. That is, $r(u) <_{R'_\ell} r_0 = r(z_0)$ in both cases, where $z_0 \in V(G_0)$ and $z_0 \notin V(G_0)$.

We will now prove that P_{u^*} intersects P_u also in R''_ℓ. This holds clearly in the case where the right line of P_{u^*} is not moved during Transformation 5, since P_{u^*} intersects P_u in R'_ℓ by the previous paragraph. Suppose now that the right line of P_{u^*} is moved during Transformation 5. Then, $r(u) <_{R'_\ell} r_0 <_{R'_\ell} r(u^*)$, while $r(u^*)$ comes immediately before r_0 in R''_ℓ, i.e. $r(u) <_{R''_\ell} r(u^*) <_{R''_\ell} r_0$, since $r_0 = r(z_0)$ does not move during Transformation 5. Therefore, since the left line of P_{u^*} does not move during Transformation 5, and since P_{u^*} intersects P_u in R'_ℓ, it follows that P_{u^*} intersects P_u also in R''_ℓ.

Denote by v_0 the vertex of $V_0(u) \cap V_B$, such that $r(v_0) = \max_{R''_\ell}\{r(v) \mid v \in V_0(u) \cap V_B\}$, cf. the statement of Transformation 6. Since $v_0 \in V_0(u)$ and $y_0 \notin N(u) \cup V_0(u)$, it follows that $v_0y_0 \notin E$. Therefore, since both v_0 and y_0 are bounded vertices, either $P_{y_0} \ll_{R''_\ell} P_{v_0}$ or $P_{v_0} \ll_{R''_\ell} P_{y_0}$. Suppose that $P_{y_0} \ll_{R''_\ell} P_{v_0}$, and thus $P_{u^*} \ll_{R''_\ell} P_{y_0} \ll_{R''_\ell} P_{v_0}$. Then, since $u^*, v_0 \in V_0(u)$ and since $V_0(u)$ is

connected, there exists at least one vertex $v \in V_0(u)$, such that P_v intersects P_{y_0} in R''_ℓ. Similarly $vy_0 \notin E$, since $y_0 \notin N(u) \cup V_0(u)$. Therefore, since y_0 is a bounded vertex, v must be an unbounded vertex with $\phi_v > \phi_{y_0}$ in R''_ℓ, and thus $N(v) \subseteq N(y_0)$ by Lemma 3. Then, $N(v)$ includes at least one vertex $v' \in V_0(u)$, and thus $v' \in N(y_0)$. Therefore, $y_0 \in V_0(u)$, which is a contradiction. Thus, $P_{v_0} \ll_{R''_\ell} P_{y_0}$. Moreover, since by Transformation 6 only the line P_u is moved, it follows that also $P_{v_0} \ll_{R'''_\ell} P_{y_0}$.

We will prove in the following that u is not adjacent in R'''_ℓ to any vertex $x \notin N(u)$. For the sake of contradiction, suppose that P_x intersects P_u in R'''_ℓ. We distinguish in the following the cases regarding x.

Case 2a. $x \in V_B \setminus N(u)$ (i.e. x is bounded) and $x \in V_0(u)$. Then, $r(x) \leq_{R''_\ell} r(v_0)$ and $r(u^*) \leq_{R''_\ell} r(v_0)$ by definition of v_0, and thus also $r(x) \leq_{R'''_\ell} r(v_0)$ and $r(u^*) \leq_{R'''_\ell} r(v_0)$. Therefore, by Transformation 6, $r(x) \leq_{R'''_\ell} r(v_0) <_{R'''_\ell} l(u)$, i.e. $r(x) <_{R'''_\ell} l(u)$. Thus $L(u) <_{R'''_\ell} R(x)$, since we assumed that P_x intersects P_u in R'''_ℓ. Furthermore, $r(x) \leq_{R'''_\ell} r(v_0) <_{R'''_\ell} l(y_0)$, i.e. $r(x) <_{R'''_\ell} l(y_0)$, since $P_{v_0} \ll_{R'''_\ell} P_{y_0}$. Recall by Corollary 5 that for all vertices $z \in N_1 \setminus N_2$, for which $R(z) <_{R''_\ell} L_0 = L(y_0)$, the values $R(z)$ lie immediately before L_0 in R''_ℓ, and thus also in R'''_ℓ. Thus, since $L(u) <_{R'''_\ell} R(x)$, and since the upper point $L(u) = R(u)$ lies immediately before $\min\{L_0, R(z) \mid z \in N_1 \setminus N_2\}$ in R'''_ℓ, it follows that $L(u) <_{R'''_\ell} L_0 = L(y_0) <_{R'''_\ell} R(x)$. Therefore, since also $r(x) <_{R'''_\ell} l(y_0)$, P_x intersects P_{y_0} in R'''_ℓ, and thus also in R''_ℓ. Thus $xy_0 \in E$, since both x and y_0 are bounded, and therefore $y_0 \in V_0(u)$, which is a contradiction. Therefore, P_x does not intersect P_u in R'''_ℓ, for every $x \in V_B \setminus N(u)$, such that $x \in V_0(u)$. In particular, since $u^*, v_0 \in V_B \setminus N(u)$ and $u^*, v_0 \in V_0(u)$, it follows that neither P_{u^*} nor P_{v_0} intersects P_u in R'''_ℓ. Therefore, since $r(u^*) \leq_{R'''_\ell} r(v_0) <_{R'''_\ell} l(u)$ by Transformation 6, it follows that $P_{u^*} \ll_{R'''_\ell} P_u$ and $P_{v_0} \ll_{R'''_\ell} P_u$.

Case 2b. $x \in V_B \setminus N(u)$ (i.e. x is bounded) and $x \notin V_0(u)$. Then $u^*x \notin E$, since $u^* \in V_0(u)$. Furthermore, since both x and u^* (resp. v_0) are bounded vertices, either $P_x \ll_{R'''_\ell} P_{u^*}$ or $P_{u^*} \ll_{R'''_\ell} P_x$ (resp. either $P_x \ll_{R'''_\ell} P_{v_0}$ or $P_{v_0} \ll_{R'''_\ell} P_x$). If $P_x \ll_{R'''_\ell} P_{u^*}$ (resp. $P_x \ll_{R'''_\ell} P_{v_0}$), then $P_x \ll_{R'''_\ell} P_{u^*} \ll_{R'''_\ell} P_u$ (resp. $P_x \ll_{R'''_\ell} P_{v_0} \ll_{R'''_\ell} P_u$) by the previous paragraph. This is a contradiction to the assumption that P_x intersects P_u in R'''_ℓ. Therefore $P_{u^*} \ll_{R'''_\ell} P_x$ and $P_{v_0} \ll_{R'''_\ell} P_x$, and thus also $P_{u^*} \ll_{R''_\ell} P_x$ and $P_{v_0} \ll_{R''_\ell} P_x$. Thus, in particular $r(v_0) <_{R'''_\ell} l(x)$. Furthermore, the lower endpoint $l(u) = r(u)$ of P_u comes by Transformation 6 immediately after $r(v_0)$ in R'''_ℓ, and thus $r(v_0) <_{R'''_\ell} r(u) <_{R'''_\ell} l(x)$. Then, $L(x) <_{R'''_\ell} R(u)$, since we assumed that P_x intersects P_u in R'''_ℓ.

We distinguish now the cases according to the relative positions of P_u and P_x in R''_ℓ. If $P_x \ll_{R''_\ell} P_u$, then $P_{u^*} \ll_{R''_\ell} P_x \ll_{R''_\ell} P_u$ by the previous paragraph, which is a contradiction, since P_{u^*} intersects P_u in R''_ℓ, as we proved above. If $P_u \ll_{R''_\ell} P_x$, then $L_0 \leq_{R''_\ell} L(x)$, since $x \in V_B \setminus N(u) \setminus V_0(u)$ and $L_0 = \min_{R''_\ell}\{L(x) \mid x \in V_B \setminus N(u) \setminus V_0(u), P_u \ll_{R''_\ell} P_x\}$. Thus $R(u) <_{R'''_\ell} L_0 \leq_{R'''_\ell} L(x)$ by Transformation 3, which is a contradiction, since $L(x) <_{R'''_\ell} R(u)$ by the previous paragraph. Suppose that P_x intersects P_u in R''_ℓ. Note that $x \notin V(G_0)$, since $x \notin N(u) \cup V_0(u)$ and $V(G_0) \subseteq N[u] \cup V_0(u)$ by Observation 4. Thus, since we assumed that P_x intersects P_u in R''_ℓ, i.e. P_x intersects the line segment ℓ in R''_ℓ, it follows that P_x intersects also P_{x_2} in R''_ℓ. Therefore $x \in N(x_2)$, since both x and x_2 are bounded, and thus $x \in V_0(u)$, since also $x_2 \in V_0(u)$. This is a contradiction, since $x \notin V_0(u)$ by the assumption of Case 2b. Therefore, P_x does not intersect P_u in R'''_ℓ, for every $x \in V_B \setminus N(u)$, such that $x \notin V_0(u)$.

Case 2c. $x \in V_U$ (i.e. x is unbounded), such that $\phi_x < \phi_u$ in R'''_ℓ. Then, since both P_x and P_u are lines in R'''_ℓ, it follows that $l(x) <_{R'''_\ell} l(u)$ and $R(x) >_{R'''_\ell} R(u)$. Thus, by Transformation 6, $l(x) <_{R'''_\ell} r(v_0) <_{R'''_\ell} l(u)$ and $R(u) <_{R'''_\ell} L_0 = L(y_0) <_{R'''_\ell} R(x)$. Since $P_{v_0} \ll_{R'''_\ell} P_{y_0}$ (as we proved above), it follows that P_x intersects both P_{v_0} and P_{y_0} in R'''_ℓ (and thus also in R''_ℓ), and that $\phi_x < \phi_{v_0}$ and $\phi_x < \phi_{y_0}$ in both R''_ℓ and R'''_ℓ. Therefore, since both v_0 and y_0 are bounded, it follows that $x \in N(v_0)$ and $x \in N(y_0)$. Thus $x, y_0 \in V_0(u)$, since $v_0 \in V_0(u)$. This is a contradiction, since $y_0 \notin V_0(u)$ by definition of y_0. Therefore, P_x does not intersect P_u in R'''_ℓ, for every $x \in V_U$, for which $\phi_x < \phi_u$ in R'''_ℓ.

Summarizing, due to Part 1 and due to Cases 2a, 2b, and 2c of Part 2, it follows that P_u intersects in R_ℓ''' only the parallelograms P_z, for every $z \in N(u)$, and possibly some trivial parallelograms (lines) P_x, where $x \in V_U$ and $\phi_x > \phi_u$ in R_ℓ'''. However, since $\phi_x > \phi_u$ in R_ℓ''' for all these vertices x, it follows that u is not adjacent to these vertices in R_ℓ'''. Thus R_ℓ''' is a projection representation of G, since $R_\ell'' \setminus \{u\}$ is a projection representation of $G \setminus \{u\}$ by Lemma 42. This completes the proof of the lemma. ■

The next lemma follows now easily by Lemma 43 and by the fact that $V_0(u)$ induces a connected subgraph of G.

Lemma 44 *The (bounded) vertex u has the right border property in R_ℓ''', i.e. there exists no pair of vertices $z \in N(u)$ and $v \in V_0(u)$, such that $P_z \ll_{R_\ell'''} P_v$.*

Proof. Recall first that $u_0^* \in V_0(u) \cap V_B$ by Lemma 4, i.e. $V_0(u) \cap V_B \neq \emptyset$. Furthermore, recall that by Transformation 6 the lower endpoint $l(u) = r(u)$ of P_u comes immediately after $\max\{r(v) \mid v \in V_0(u) \cap V_B\}$ in R_ℓ''', and thus $r(v) <_{R_\ell'''} r(u)$ for every $v \in V_0(u) \cap V_B$. Since u is a bounded vertex in R_ℓ''', and since R_ℓ''' is a projection representation of G by Lemma 43, P_u does not intersect P_v in R_ℓ''', for any $v \in V_0(u) \cap V_B$. Therefore, for every $v \in V_0(u) \cap V_B$, either $P_u \ll_{R_\ell'''} P_v$ or $P_v \ll_{R_\ell'''} P_u$. If $P_u \ll_{R_\ell'''} P_v$ for a vertex $v \in V_0(u) \cap V_B$, then in particular $r(u) <_{R_\ell'''} r(v)$, which is a contradiction. Therefore, $P_v \ll_{R_\ell'''} P_u$ for every $v \in V_0(u) \cap V_B$.

Suppose now for the sake of contradiction that $P_z \ll_{R_\ell'''} P_v$ for two vertices $z \in N(u)$ and $v \in V_0(u)$. Suppose first that v is a bounded vertex, i.e. $v \in V_0(u) \cap V_B$. Then, since $P_v \ll_{R_\ell'''} P_u$ by the previous paragraph, it follows that $P_z \ll_{R_\ell'''} P_v \ll_{R_\ell'''} P_u$, and thus $z \notin N(u)$, which is a contradiction.

Suppose now that v is an unbounded vertex. Then, since $V_0(u)$ is connected and $V_0(u) \cap V_B \neq \emptyset$, there exists at least one bounded vertex $v' \in V_0(u) \cap V_B$, such that $v' \in N(v)$. Then $P_{v'} \ll_{R_\ell'''} P_u$, as we proved above. We distinguish now the cases according to the relative positions of P_v and P_u in R_ℓ'''. If $P_v \ll_{R_\ell'''} P_u$, then $P_z \ll_{R_\ell'''} P_v \ll_{R_\ell'''} P_u$ by the assumption on z and v, and thus $z \notin N(u)$, which is a contradiction. If $P_u \ll_{R_\ell'''} P_v$, then $P_{v'} \ll_{R_\ell'''} P_u \ll_{R_\ell'''} P_v$, and thus $v' \notin N(v)$, which is again a contradiction. Suppose that P_v intersects P_u in R_ℓ'''. Then, $\phi_v > \phi_u$ in R_ℓ''', since u is bounded in R_ℓ''' and $v \notin N(u)$. Therefore, in particular $r(u) <_{R_\ell'''} r(v)$. Furthermore, since v is unbounded and $v' \in N(u)$, it follows that $r(v) <_{R_\ell'''} r(v')$ by Lemma 1, and thus $r(u) <_{R_\ell'''} r(v) <_{R_\ell'''} r(v')$, i.e. $r(u) <_{R_\ell'''} r(v')$. This is a contradiction, since $P_{v'} \ll_{R_\ell'''} P_u$ for every $v' \in V_0(u) \cap V_B$, as we proved above. Summarizing, there exist no vertices $z \in N(u)$ and $v \in V_0(u)$, such that $P_z \ll_{R_\ell'''} P_v$. This completes the proof of the lemma. ■

4.11 The correctness of Condition 4

Note now that the projection representation R_ℓ''' of G (cf. Lemma 43) has $k-1$ unbounded vertices, since the input graph G has k unbounded vertices and u is bounded in R_ℓ'''. Therefore, the projection representation $R^* = R_\ell'''$ satisfies the conditions of Theorem 2. However, in order to complete the proof of Theorem 2, we have to prove the correctness of Condition 4 (cf. Lemma 46 in Section 4.6). To this end, we first prove Lemma 45.

Recall that, for simplicity reasons, before applying Transformations 4, 5, and 6, we have added to G an isolated bounded vertex t, and thus also $t \in V_B \setminus N(u) \setminus V_0(u)$. This isolated vertex t corresponds to a parallelogram P_t, such that $P_v \ll_R P_t$ and $P_v \ll_{R_\ell} P_t$ for every other vertex v of G; thus also $P_v \ll_{R_\ell'} P_t$, $P_v \ll_{R_\ell''} P_t$, and $P_v \ll_{R_\ell'''} P_t$ for every vertex $v \neq t$ of G. The next lemma follows now easily by Transformation 6 and Lemma 43.

Lemma 45 *If $V_B \setminus N(u) \setminus V_0(u) = \{t\}$, then there exists a projection representation $R^\#$ of G with the same unbounded vertices as in R, where u has the right border property in $R^\#$.*

Proof. Suppose that $V_B \setminus N(u) \setminus V_0(u) = \{t\}$, i.e. the set $V_B \setminus N(u) \setminus V_0(u)$ is empty in G before the addition of the isolated bounded vertex t. Then, the values L_0 and $L_0(z)$ for every $z \in N(u)$ are

all equal to $L(t)$. Therefore, since we can place the parallelogram P_t that corresponds to t arbitrarily much to the right of every other parallelogram in the projection representation R_ℓ, these values can become arbitrarily big in R_ℓ. Recall that $N_1 = \{z \in N(u) \mid r(z) <_{R_\ell} \ell_0\}$ by definition. Then, during Transformation 4, $r(z)$ comes immediately after ℓ_0 on L_2 for every $z \in N_1$ (i.e. $R(z)$ does not come immediately before $L_0(z)$ on L_1, since $L_0(z) = L(t)$ is arbitrarily big). Therefore, $\ell_0 <_{R'_\ell} r(z)$ for every $z \in N_1$, and thus $\ell_0 <_{R'_\ell} r(z)$ for every $z \in N(u)$. That is, $N_2 = N(u)$, since by definition $N_2 = \{z \in N(u) \mid \ell_0 <_{R'_\ell} r(z)\}$. Thus, in particular $N_1 \setminus N_2 = N_1 \setminus N(u) = \emptyset$, since $N_1 \subseteq N(u)$ by definition.

Consider now the projection representation R'''_ℓ, which is obtained by applying Transformation 6 to R''_ℓ. Recall that by Transformation 6 the upper endpoint $L(u) = R(u)$ of the line P_u comes immediately before $\min\{L_0, R(z) \mid z \in N_1 \setminus N_2\} = L_0$ in R'''_ℓ (since $N_1 \setminus N_2 = \emptyset$ by the previous paragraph). Then, since the value $L_0 = L(t)$ has been chosen arbitrarily big, the angle ϕ_u of P_u becomes arbitrarily small in R'''_ℓ, i.e. in particular smaller than all other angles in R'''_ℓ. Furthermore, since R'''_ℓ is a projection representation of G by Lemma 43, it follows that P_u intersects in R'''_ℓ only the parallelograms P_z, for every $z \in N(u)$, and possibly some trivial parallelograms (lines) P_x, where x is an unbounded vertex and $\phi_x > \phi_u$ in R'''_ℓ. Denote now by $R^\#$ the projection representation that is obtained from R'''_ℓ if we make u again an unbounded vertex. Then, since the angle ϕ_u is smaller than all other angles in both R'''_ℓ and $R^\#$, it follows in particular that $\phi_u < \phi_z$ in $R^\#$ for every $z \in N(u)$. Therefore, u remains adjacent to all vertices $z \in N(u)$ in the graph induced by $R^\#$, and thus $R^\#$ is a projection representation of G, in which u is an unbounded vertex.

Finally, recall by Lemma 44 that there exists no pair of vertices $z \in N(u)$ and $v \in V_0(u)$, such that $P_z \ll_{R'''_\ell} P_v$ in R'''_ℓ. Therefore, since the only difference between R'''_ℓ and $R^\#$ is that u is made bounded in $R^\#$, there exists also in $R^\#$ no pair of vertices $z \in N(u)$ and $v \in V_0(u)$, such that $P_z \ll_{R^\#} P_v$ in $R^\#$. That is, u has the right border property in $R^\#$. This completes the proof of the lemma. ■

Now we can prove the correctness of Condition 4.

Lemma 46 *Condition 4 is true.*

Proof. Let $G = (V, E)$ be a connected graph in Tolerance $\cap$ Trapezoid and R be a projection representation of G with u as the only unbounded vertex. Let furthermore $V_0(u) \neq \emptyset$ be connected and $V = N[u] \cup V_0(u)$. If u has the right (resp. the left) border property in R, then R (resp. the reverse representation $\widehat{R}$ of R) satisfies Condition 4. Suppose now that u has neither the left nor the right border property in R, and suppose w.l.o.g. that G has the smallest number of vertices among the graphs that satisfy the above conditions. Then, since $V_0(u) \neq \emptyset$ is connected, the whole proof of Theorem 2 above applies to G. In particular, we can construct similarly to the above the induced subgraphs G_0 and $G'_0 = G[V(G_0) \cup \{u^*\}]$ of G. Then, $V(G_0) \subseteq N[u] \cup V_0(u)$ by Observation 4, and thus also $V(G'_0) \subseteq N[u] \cup V_0(u)$, since $u^* \in V_0(u)$. Furthermore, u is the only unbounded vertex of G'_0.

Recall that G'_0 is a connected subgraph of G by Observation 5. Furthermore, G'_0 has strictly smaller vertices than G, and thus Condition 4 applies to G'_0, i.e. we can construct the projection representations R_ℓ, R'_ℓ, R''_ℓ, and R'''_ℓ, as above. Moreover, since $V = V(G) = N[u] \cup V_0(u)$ by assumption, it follows that $V_B \setminus N(u) \setminus V_0(u) = \{t\}$ after adding an isolated bounded vertex t to R_ℓ. Thus, there exists by Lemma 45 a projection representation $R^{**} = R^\#$ of G with the same unbounded vertices as in R (i.e. with u as the only unbounded vertex), such that u has the right border property in R^{**}. This completes the proof of the lemma. ■

Summarizing, we proved in Lemma 46 the correctness of Condition 4, which we assumed true in Section 4.6 to prove our results of Sections 4.7-4.10. Therefore, since $R^* = R'''_\ell$ is a projection representation of the graph G (cf. Lemma 43) and R^* has $k-1$ unbounded vertices (where u is a bounded vertex in R^*), this completes the proof of Theorem 2.

5 Concluding remarks and open problems

In this article we dealt with the 30 years old conjecture of [11], which states that if a graph G is both tolerance and cocomparability, then it is also a bounded tolerance graph. Our main result is that this conjecture is true for every graph G that admits a tolerance representation with exactly one unbounded vertex. Our proofs are constructive, in the sense that, given a tolerance representation R of a graph G, we transform R into a bounded tolerance representation R^* of G. Furthermore, we conjectured that any *minimal* graph G that is a tolerance but not a bounded tolerance graph, has a tolerance representation with exactly one unbounded vertex. Our results imply the non-trivial result that, in order to prove the conjecture of [11], it suffices to prove our conjecture. An interesting problem that we leave open for further research is to prove this new conjecture (which, in contrast to one stated in [11], does not concern any other class of graphs, such as cocomparability, or trapezoid graphs). Since cocomparability graphs can be efficiently recognized [24], a positive answer to this conjecture (and thus also to the conjecture of [11]) would enable us to efficiently distinguish between tolerance and bounded tolerance graphs, although it is NP-complete to recognize each of these graph classes separately [19].

References

[1] T. Andreae, U. Hennig, and A. Parra. On a problem concerning tolerance graphs. *Discrete Applied Mathematics*, 46(1):73–78, 1993.

[2] K. P. Bogart, P. C. Fishburn, G. Isaak, and L. Langley. Proper and unit tolerance graphs. *Discrete Applied Mathematics*, 60(1-3):99–117, 1995.

[3] A. Brandstädt, V. B. Le, and J. P. Spinrad. *Graph classes: a survey.* Society for Industrial and Applied Mathematics (SIAM), 1999.

[4] A. H. Busch. A characterization of triangle-free tolerance graphs. *Discrete Applied Mathematics*, 154(3):471–477, 2006.

[5] D. G. Corneil, S. Olariu, and L. Stewart. LBFS orderings and cocomparability graphs. In *Proceedings of the tenth annual ACM-SIAM symposium on Discrete algorithms (SODA)*, pages 883–884, 1999.

[6] J. S. Deogun and G. Steiner. Polynomial algorithms for hamiltonian cycle in cocomparability graphs. *SIAM Journal on Computing*, 23(3):520–552, 1994.

[7] B. Eisermann. A sufficient condition for boundedness of tolerance graphs. *Discrete Applied Mathematics*, 159(17):2165–2169, 2011.

[8] S. Felsner. Tolerance graphs and orders. *Journal of Graph Theory*, 28(3):129–140, 1998.

[9] M. C. Golumbic. *Algorithmic graph theory and perfect graphs (Annals of Discrete Mathematics, Vol. 57).* North-Holland Publishing Co., 2004.

[10] M. C. Golumbic and C. L. Monma. A generalization of interval graphs with tolerances. In *Proceedings of the 13th Southeastern Conference on Combinatorics, Graph Theory and Computing, Congressus Numerantium 35*, pages 321–331, 1982.

[11] M. C. Golumbic, C. L. Monma, and W. T. Trotter. Tolerance graphs. *Discrete Applied Mathematics*, 9(2):157–170, 1984.

[12] M. C. Golumbic and A. Siani. Coloring algorithms for tolerance graphs: reasoning and scheduling with interval constraints. In *Proceedings of the Joint International Conferences on Artificial Intelligence, Automated Reasoning, and Symbolic Computation (AISC/Calculemus)*, pages 196–207, 2002.

[13] M. C. Golumbic and A. N. Trenk. *Tolerance Graphs.* Cambridge studies in advanced mathematics, 2004.

[14] R. B. Hayward and R. Shamir. A note on tolerance graph recognition. *Discrete Applied Mathematics*, 143(1-3):307–311, 2004.

[15] G. Isaak, K. L. Nyman, and A. N. Trenk. A hierarchy of classes of bounded bitolerance orders. *Ars Combinatoria*, 69, 2003.

[16] J. M. Keil and P. Belleville. Dominating the complements of bounded tolerance graphs and the complements of trapezoid graphs. *Discrete Applied Mathematics*, 140(1-3):73–89, 2004.

[17] D. Kratsch and L. Stewart. Domination on cocomparability graphs. *SIAM Journal on Discrete Mathematics*, 6(3):400–417, 1993.

[18] G. B. Mertzios, I. Sau, and S. Zaks. A new intersection model and improved algorithms for tolerance graphs. *SIAM Journal on Discrete Mathematics*, 23(4):1800–1813, 2009.

[19] G. B. Mertzios, I. Sau, and S. Zaks. The recognition of tolerance and bounded tolerance graphs. *SIAM Journal on Computing*, 40(5):1234–1257, 2011.

[20] G. Narasimhan and R. Manber. Stability and chromatic number of tolerance graphs. *Discrete Applied Mathematics*, 36:47–56, 1992.

[21] A. Parra. Eine Klasse von Graphen, in der jeder Toleranzgraph ein beschränkter Toleranzgraph ist. *Abhandlungen aus dem Mathematischen Seminar der Universität Hamburg*, 64(1):125–129, 1994.

[22] A. Pnueli, A. Lempel, and S. Even. Transitive orientation of graphs and identification of permutation graphs. *Canadian Journal of Mathematics*, 23(1):160–175, 1971.

[23] S. P. Ryan. Trapezoid order classification. *Order*, 15:341–354, 1998.

[24] J. P. Spinrad. *Efficient graph representations*, volume 19 of *Fields Institute Monographs*. American Mathematical Society, 2003.